SSW7000

Medium Voltage Soft-Starter

Medium Voltage Soft-Starter

The SSW7000 uses state-of-the-art technology to provide start / stop control and protection for three-phase medium voltage induction motors. Developed to ensure excellent performance, it prevents mechanical shocks from the load, protects the motor against related burnouts or current surges in the power supply and thus, offers a complete solution for various applications.

Size A

Size N

pictures for illustrative purposes only

Certifications

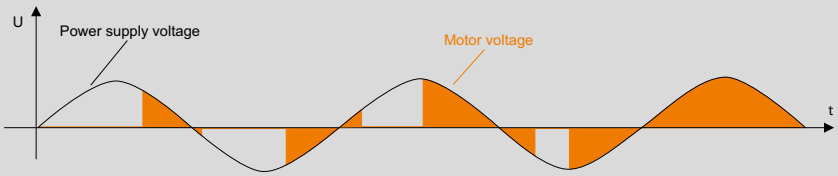

The SSW7000 reduces the voltage applied to the motor at start. As a consequence, motor current and torque is reduced for a smooth start. The motor voltage control is performed with the firing angle control of the thyristors in antiparallel connection.

Features

- Torque control
  The SSW7000 features FTC - Flexible Torque Control, technology developed by WEG which uses the vector control and control of direct torque concepts, based on technologies developed for the vector frequency inverters CFW.
  The FTC is flexible to select the desired torque control according to the type of load applied to the motor (constant loads, quadratic loads, or loads with lower or higher starting torque), providing a smooth start with a linear speed ramp along the entire starting process.
- Accessories can be easily and quickly installed by using the Plug and Play' concept
- Motor voltage: 2.3kV, 4.16kV or 6.9kV
- Power: 750 hp to 4500 hp
- Output current: 180A, 300A and 360A
- Protection Degree: IP41 or Nema 12
- Operating interface (HMI) with graphic LCD
- Real time clock
- Main and bypass vacuum contactors
- Medium voltage fuses
- Power and control insulated by fiber optics
- Flash memory module (accessory)
- SoftPLC Function
- Licence-free software SuperDrive and WLP
- USB connection to PC
- Motor thermal protection - PT100 - 8 channels (optional accessory)
- 5 start modes
- Network communication boards (accessories):
  Devicenet, Profibus-DP, Ethernet and Modbus, RS-232 or RS-485

Size A

Size N

pictures for illustrative purposes only

- The heatsinks are dimensioned for the heavy duty overload cycle.

- The power stacks are developed in independent modules with wheels, making installation and maintenance easy.

Enables smooth starting of motors up to rated speed, by eliminating impacts of inrush current on the power supply and by eliminating impacts of mechanical shocks on the load and the coupling.This helps in reducing maintenance of bearings, couplings, gear boxes, pulleys, belts and chains, in addition to protecting the motor.

Characteristics

Plug and play philosophy

The installation of the accessories is based on the plug-and-play philosophy, that is, they are automatically configured when connected to the SSW7000, ensuring a faster and easier process.

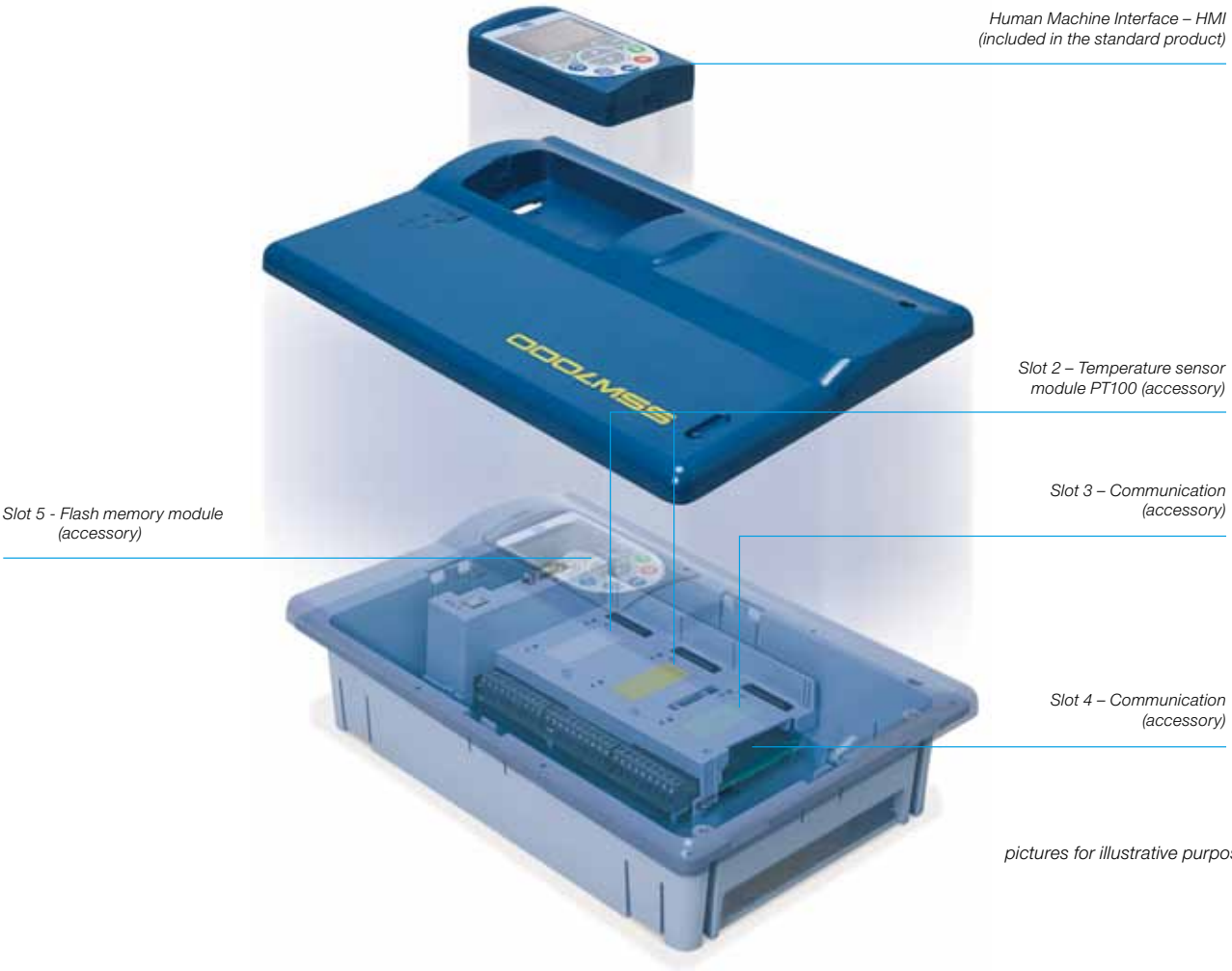

Characteristics

Human Machine Interface – HMI

Navigation is similar to the logic used in cell phones, with the option of sequential access to the parameters or through the groups (Menu) by means of the function access keys on the display (soft keys).

Right soft key: function defined by the display

Left soft key: function defined by the display

Key for scrolling through menus and parameters and for modifying parameter content

FWD/REV Selection

Start key

Local / Remote Selection

Stop key

Jog key

pictures for illustrative purposes only

Functions

- Power supply overvoltage and undervoltage programmable protections, voltage unbalance between phases of the power supply
- Motor overload and underload programmable protections
- Motor thermal protections
- Actuation of the programmable protections between fault or alarm
- Indication of:
  - motor current per phase, motor current as % of SSW rated current and as % of motor nominal current
  - power supply input voltages per phase
  - motor active and apparent power in kW and kVA
  - value of the analog inputs
  - status of the digital inputs and outputs
  - status of the thermal class protection
  - temperature of the SCRs
  - motor temperature using the accessory module for measuring temperature IOE
  - hours energized, hours in operation, hours fan use
  - ground fault current or voltage
  - Fault and alarm indication
- Fault history:
  - saving of the 10 last faults
  - date and time of fault occurence
  - motor current in the fault event
  - power supply voltage in the fault event
  - SSW7000 operating status in the fault event
- Start and full duty diagnosis:
  - maximum starting current
  - average starting current
  - real starting time
  - maximum current at full duty
  - Power supply maximum and minimum voltage with the motor activated
  - Power supply maximum and minimum frequency with the motor activated
  - maximum number of starts per hour
  - total number of starts
  - maximum temperature of the SCRs
  - maximum temperatures of the motor (with the use of the IOE accessory)
- Flexible selection of start and stop control type, enabling: Ramp Voltage, Constant or in Ramp Current Limitation, Pump Control and -Constant Torque Control, Linear or Quadratic load starting
- Flexible Torque Control with extremely high performance
- Possibility to monitor the measurements of power supply voltages via Serial or Fieldbus communication
- Monitoring and programming in graphical mode using SuperDriveG2 Software
- Soft PLC allows implementation of PLC software or special operating versions of SSW7000 soft-starter.

Applications

- Blowers
- Compressors
- Conveyors
- Chippers
- Fans
- Exhausters
- Pumps

Chemical, Petrochemical, Oil and Gas

Cement and Mining

Steel and Metallurgy

Sugar and Chemical

Pulp and Paper

Water & Waste Water Management

pictures for illustrative purposes only

Advantages

- Flexible Torque control
- Overload capacity of 450% for 30 s. (2x / hour duty cycle)
- Management of Demand restrictions by the electric company
- Bumpless starting
- Motor protection
- Mechanical wear reduction
- Handles lower inrush current limitations of power supply

Product Code

1	2	3	4	5	6	7	8	9	10	11
SSW7000	A	300	T	6	22	41	F	-	-	-

1 - WEG medium voltage soft-starter

SSW7000	Series 7000

2 - Frame Size

A	size A
N	size N

3 - Rated Output Current

2300 Vca	4160 Vca	6900 Vca
180 = 180 A	180 = 180 A	180 = 180 A
300 = 300 A	300 = 300 A	300 = 300 A
360 = 360 A	360 = 360 A	360 = 360 A

4 - Power Supply

T	Three-phase

5 - Rated Voltage

2	2.3 kV
4	4.16 kV
6	6.9 kV

6 - Single-Phase Auxiliary Power Supply

11	110 Vac
22	220 Vac

7 - Protection Degree

00	IP00 (Kits) (*1)
41	IP41
N2	NEMA 12

8 - Forced Ventilation

F	Forced
(blank)	Standard

9 - Special Hardware

(blank)	Standard

10 - Special Hardware

(blank)	Standard

11 - Market

(blank)	Global

*Note: (*1) Under request*

Specification

Size A

SSW7000 Medium Voltage Soft-Starter								
Power Supply		Code	Output Rated Current	Size	Protection Degree	Single-Phase Auxiliary Power Supply	Motor maximum power (*2)	
							HP	kW
2300 Vac	Three-phase	SSW7000A180T22241	180 A	A	IP41	220 Vac	750	550
		SSW7000A180T21141				110 Vac	750	550
		SSW7000A300T22241	300 A			220 Vac	1350	1000
		SSW7000A300T21141				110 Vac	1350	1000
		SSW7000A360T22241	360 A			220 Vac	1500	1100
		SSW7000A360T21141				110 Vac	1500	1100
4160 Vac		SSW7000A180T42241	180 A	A	IP41	220 Vac	1500	1100
		SSW7000A180T41141				110 Vac	1500	1100
		SSW7000A300T42241	300 A			220 Vac	2500	1900
		SSW7000A300T41141				110 Vac	2500	1900
		SSW7000A360T42241	360 A			220 Vac	3000	2250
		SSW7000A360T41141				110 Vac	3000	2250
6900 Vac		SSW7000A180T62241	180 A	A	IP41	220 Vac	2500	1900
		SSW7000A180T61141				110 Vac	2500	1900
		SSW7000A300T62241	300 A			220 Vac	3700	2800
		SSW7000A300T61141				110 Vac	3700	2800
		SSW7000A360T62241	360 A			220 Vac	4500	3400
		SSW7000A360T61141				110 Vac	4500	3400

Note: (2) The motor power rates above are meant for loads with normal overload, e.g. centrifugal pumps and compressors, based on WEG 4-pole 60-Hz motors. For applications with heavy duty overloads or other more severe conditions, contact WEG's sales force. The dimensioning of the SSW7000 must be calculated based on the information of the load curve, number of starts per hour and load type.*

Specification

Size N

SSW7000 Medium Voltage Soft-Starter								
Power Supply		Code	Output Rated Current	Size	Protection Degree	Single-Phase Auxiliary Power Supply	Motor maximum power (*2)	
							HP	kW
2300 Vac	Three-phase	SSW7000A180T222N2	180 A	N	NEMA 12	220 Vac	750	550
		SSW7000A180T211N2				110 Vac	750	550
		SSW7000A300T222N2	300 A			220 Vac	1350	1000
		SSW7000A300T211N2				110 Vac	1350	1000
		SSW7000A360T222N2	360 A			220 Vac	1500	1100
		SSW7000A360T211N2				110 Vac	1500	1100
4160 Vac		SSW7000A180T422N2	180 A	N	NEMA 12	220 Vac	1500	1100
		SSW7000A180T411N2				110 Vac	1500	1100
		SSW7000A300T422N2	300 A			220 Vac	2500	1900
		SSW7000A300T411N2				110 Vac	2500	1900
		SSW7000A360T422N2	360 A			220 Vac	3000	2250
		SSW7000A360T411N2				110 Vac	3000	2250

Note: (2) The motor power rates above are meant for loads with normal overload, e.g. centrifugal pumps and compressors, based on WEG 4-pole 60-Hz motors. For applications with heavy duty overloads or other more severe conditions,contact WEG's sales force. The dimensioning of the SSW7000 must be calculated based on the information of the load curve, number of starts per hour and load type.*

Accessories

Reference	Description	Slot
	Control accessories to install in Slots 1, 2 and 3	
IOE-04	Module for 8 temperature sensors PT100	1 e 2
RS485-01	RS-485 serial communication module (Modbus)	3
RS232-01	RS-232C serial communication module (Modbus)	
RS232-02	RS-232C serial communication module with switch to program the microcontroller FLASH memory	
	Anybus-CA Accessories to install in Slots 4	
PROFDP-05	ProfibusDP interface module	4
DEVICENET-05	Devicenet interface module	
ETHERNET/IP-05	EtherNet/IP interface module	
RS232-05	RS-232 interface module (passive) (Modbus)	
RS485-05	RS485 interface module (passive) (Modbus)	
	Flash Memory Module to install in Slot 5 – Included in Standard Models	
MMF-01	FLASH memory module	5
	Other Accessories	
HMI-01	Man Machine Interface – MMI (sold separately) (1)	-
RHMIF-01	Frame kit for MMI (protection rate IP56)	
TC FT	Ground fault CT	

Block Diagram

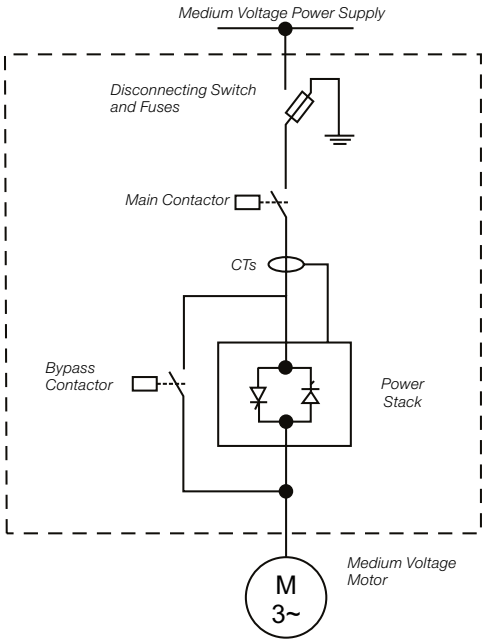

Dimensions

pictures for illustrative purposes only

Sizes	Width mm (inch)	Height mm (inch)	Depth mm (inch)	Weight (w/ power stacks) kg (lb)
A	1200 (47.2)	2365 (93)	1007 (39.6)	970 (2140)
N	1072 (42.2)	2365 (93)	845 (33.3)	970 (2140)

Power stacks

Rated Voltage	Width mm (inch)	Height mm (inch)	Depth mm (inch)	Weight kg (lb)
2.3 kV	262 (10.3)	772 (28.4)	430 (16.9)	53,0 (117)
4.16 kV	262 (10.3)	772 (28.4)	546 (21.5)	68.6 (151)
6.9 kV	262 (1.03)	772 (28.4)	664 (26.1)	83.3 (184)

Standards

ANSI/IEEE C37.2	Function/Protection Feature	Standard ▭	Option ▭
19	Reduced Voltage Starting and Bypass	▭	
27	Undervoltage protection	▭	
37	Undercurrent protection	▭	
46	Phase-Balance Current protection	▭	
47	Phase Sequence	▭	
48	Incomplete Sequence	▭	
50	Instantaneous Overcurrent trip	▭	
51	Overcurrent trip	▭	
55	Power Factor check	▭	
59	Overvoltage	▭	
81	Frequency check	▭	
86	Lockout Relay - electronic	▭	
50N/51G	Ground fault detection instantaneous and fault-current		▭
49 & 38	Winding Temperature and Bearing Temperature		▭

Technical specifications

Power Supply	Power Voltage (R/1 L1, S/3L2,T/5L3)	Low voltage test: 500Vac: (-60% to +10%) or (200 to 550Vac) Models: 2300Vac: (-60% to +10%) or (920 to 2530Vac) 4160Vac: (-60% to +10%) or (2760 to 4576Vac) 6900Vac: (-60% to +10%) or (2760 to 7590Vac)
	Frequency	(50 to 60Hz): (±10%) or (45 to 66Hz)
Capacity	Maximum number of starts	5 starts in 2 hours (One start every 30 minutes)
	Start cycle	AC-53a; 4.5-30:50-2
Thyristors	Medium voltage SCRs per power stack	2300Vac: 2 thyristors per per power stack 4160Vac: 2 coupled pairs of thyristors 6900Vca: 2 coupled trilplets of thyristors
	Peak reverse voltage on the power stack	2300Vac: 6.5kV 4160Vac: 13kV 6900Vac: 19.5kV
Protections	Protection by Hardware	dv/dt filter Active overvoltage protection on the thyristors
Control Supply	Control voltage	As per code of the SSW7000: 110Vac: (-15% to10%) or (93.5 to 121Vac) 230Vac: (-15% to 10%) or (195.6 to 253Vac)
	Frequency	(50 to 60Hz): (±10%) or (45 to 66Hz)
	Consumption	Continuous: 900 mA Peak: 9.5 A (during the closing of the vacuum contactors)
Control	Method	Voltage ramp. Current limitation. Pump control. Torque control. Current ramp.
Inputs	Digital	6 insulated digital inputs, 24 Vdc, programmable functions
	Analog	2 differential inputs insulated by differential amplifier; AI1 resolution: 12 bits, AI2 resolution: 11bits + signal, (0 to 10) V, (0 to 20) mA or (4 to 20) mA, Impedance: 400kQ for (0 to 10V), 500Q for (0 to 20mA) or (4 to 20mA), programmable functions
Outputs	Digital	3 NO/NC contact relays, 240 Vac, 1A, programmable functions.
	Analog	2 insulated outputs, (0 to 10V) RL ± 10kQ (maximum load), 0 to 20mA or 4 to 20mA RL<500Q, 11-bit resolution, programmable functions
Man Machine Interface	Standard	9 keys: Turn/Stop, Increase, Decrease, Rotation Direction, Jog, Local/Remote, right Soft key and left Soft key. Graphic LCD. It enables access to/change of all parameters.
Safety	Main protections	Under and Overcurrent and current unbalance. Under and Overvoltage and voltage unbalance. Under and Overtorque and Active overpower Phase loss. Reverse phase sequence Overtemperature in the power racks. Motor overload. Motor overtemperature (optional). External defect. Ground fault by voltage or current. Fault in the power racks. Fault in the power contactors. Faults in the control boards. Communication faults of MMI and between controls. Faults in the communication networks. Programming errors. For further details and more protections implemented, refer to the programming manual.
Protection degree	IP41	Standard panel
PC connection for programming	USB Connector	USB standard Rev. 2.0 (basic speed). USB plug type B “device”. Interconnecting Cable: standard host/device shielded USB cable
Environmental Conditions	Temperature	-10° a 40°C
	Altitude	Up to 1000 m above sea level. For higher altitudes, contact our sales force.
	Humidity	Air relative humidity of 5 % to 90 % non-condensing.
Standards	NBR IEC 62271-200	High voltage controlgear and switchgear - part 200: High voltage controlgear and switchgear in metal enclosure for voltages over 1 kV up to and including 52 kV
	IEC 62271-1	High-voltage switchgear and controlgear - Part 1: Common specifications
	IEC 60060-1	High-voltage test techniques. Part 1: General definitions and test requirements
	CISPR 11	Industrial, scientific and medical (ISM) radio-frequency equipament - electromagnetic disturbance characteristics - limits and methods of measurement
	IEC 61000-4-4	Electromagnetic compatibility (EMC) - Part 4: testing and measurement techniques - section 4: electrical fast transient/burst immunity test. Basic EMB publication
	IEC 61000-4-18	Electromagnetic compatibility (EMC) - Part 4-18: testing and measurement techniques - damped oscillatory wave immunity test
	NBR IEC 60529	Protection rates for electric equipment enclosures (ip code)
	UL 347	Medium Voltage AC Contactors, Controllers and Control Centers
	UL 347B	Medium Voltage Motor Controllers

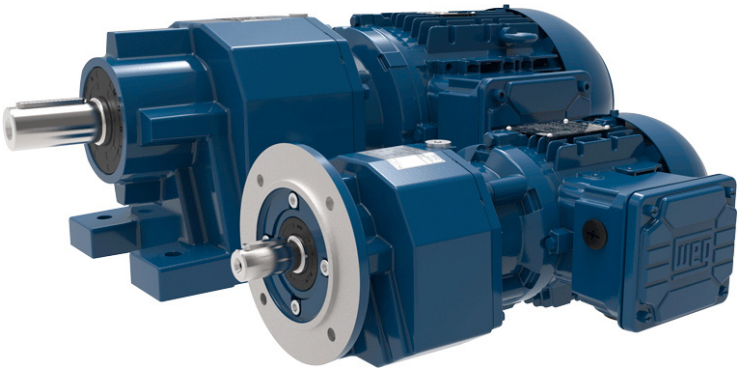

iMAG
INDUSTRIAL MOTORS
AND GEARS LIMITED

Industrial Motors and Gears Limited

Tel. 01642 467999 | Mob. 07815 889460
Fax. 01642 467988
Email. sales@imag-uk.com
Web. www.imag-uk.com

The Quality Choice

Industrial Motors and Gears Limited is a limited company
registered in England and Wales.
Registration Number 4293316.
VAT Registration Number 780154731.