W22 WIMES

Three Phase Electric Motors for the UK Water Industry

- Energy saving
- Extended lifetime
- Lower maintenance
- Available as IE2 or IE3
- 3 year warranty

Compliant with WIMES 3.03, issue 5, March 2010

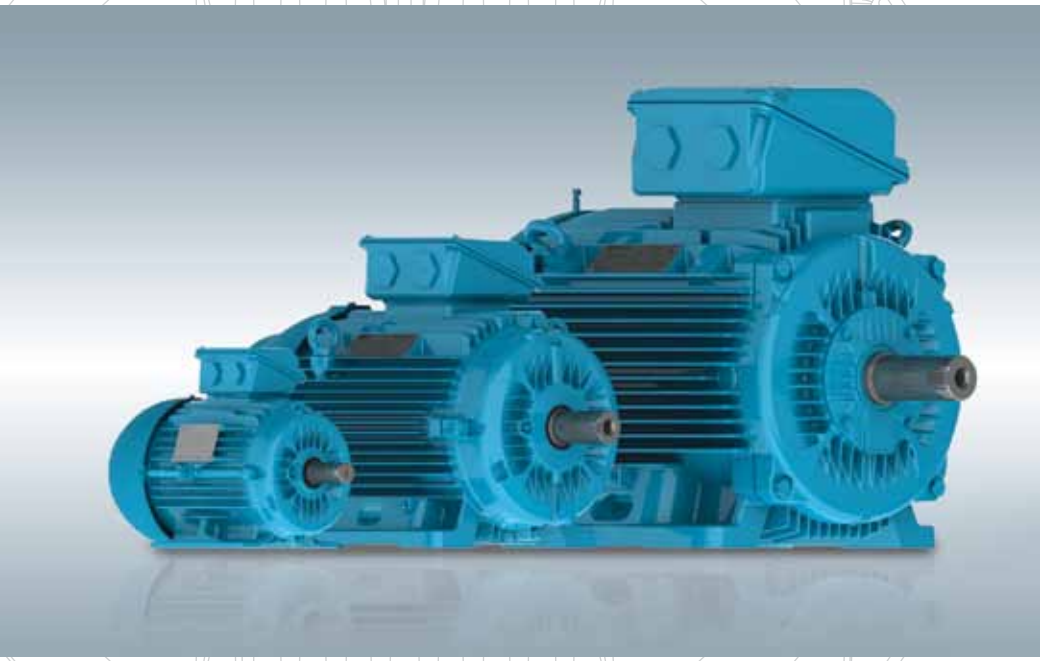

W22 WIMES

Efficiency and reliability for the water industry

Optimum performance, a comprehensive build specification coupled with maximum energy efficiency, all backed by a 3 year warranty, this is the philosophy of the new WIMES compliant W22 motor range from WEG.

Furthermore, High Efficiency and Low Total Cost of Ownership are at the heart of the W22 development. A design created today to anticipate future demands of performance and energy savings.

Low cost of ownership

A product designed to operate throughout its design life with the minimum possible energy consumption, providing high levels of productivity, operating continuously with high performance and without unplanned downtime - thus generating the maximum value to the user. This is what is behind the new W22 WIMES concept.

Energy saving

Energy costs represent approximately 90% of the total operational costs throughout the motor lifetime, with acquisition, installation and maintenance accounting for the other 10%. The W22 WIMES industrial motor platform from WEG offers efficiencies above the IE2 and IE3 minimum values specified in IEC 60034-30 : 2008 (Efficiency classes of single speed, three phase, cage induction motors IE-code), thus guaranteeing energy savings and offering reduced payback on investment.

Versatility

The W22 WIMES concept provides the user with flexibility in the position of the mains terminal box; on top as standard or on the left or right hand side of the motor as an option. Furthermore, for frame sizes 225S/M to 355A/B the terminal box position can, through fitting of an adaptor, be altered to the left or right hand side without dismantling the complete motor, therefore reducing modification time and inventory.

Built to last

The motor housings, endshields, terminal boxes and fan covers of the W22 range are produced in WEG's own foundries using high quality (FC-200) cast iron, so assuring maximum durability and high performance in aggressive environmental conditions. The new fan cover design provides greater resistance against impact whilst the endshields have been designed to improve bearing heat dissipation.

Inverter Duty applications

WEG's exclusive insulation system - WISE® (WEG Insulation System Evolution) - utilised across the W22 WIMES range increases the motor windings' dielectric resistance, consequently permitting operation with Variable Frequency Drives at voltages up to 575 V without further modification, resulting in flexibility and extended motor lifetime.

* Voltages above 575 V, please contact our nearest sales office.

Future Range Extensions

The W22 line, offering high efficiency and low whole life costs, form the basis for further WEG motor developments, including hazardous area machines and Super Premium Efficiency (future IE4) designs.

UVDB
empowered by Achilles

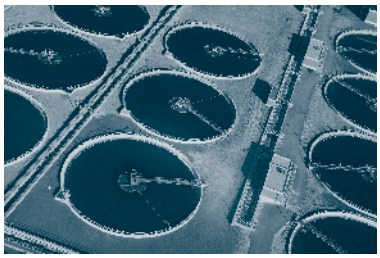

W22 WIMES
Versions Available

W22 WIMES motors are available in two versions following the standard IEC 60034-30: 2008:

- High Efficiency (IE2)
- Premium Efficiency (IE3)

Both versions comply with the forthcoming implementation of European Regulation 640/2009 of the European Commission for energy efficiency in motors and drive systems, which will see the introduction of minimum energy performance standards (MEPS) for electric motors utilised in Europe.

The legal basis for these measures is the EuP Directive (2005/32/EC), adopted on 6 July 2005, which defines the requirements for the ecodesign of energy-using products and follows the EU goal to reduce greenhouse gas emissions by 20% by the year 2020.

The EuP Directive forms the basis for numerous product-related directives. On 21 October 2009, a new version of this directive went into effect (2009/125/EC). This new directive expanded the requirements to include the ecodesign of energy-related products (ErP – Energy-Related Products).

Scope

Commission Regulation 640/2009, adopted on 22 July 2009, specifies the requirements regarding the ecodesign of electric motors and the use of electronic speed control (Variable Speed Drives). These requirements also apply when these devices are integrated into other products (e.g. machines).

The scope of the EuP Motor Regulation is more limited than that of IEC 60034-30. However, both include low voltage, three-phase cage-induction motors for 50 Hz or 50/60 Hz which:

- have a rated voltage UN up to 1,000 V
- have a rated output PN between 0.75 kW and 375 kW
- have 2, 4 or 6 poles
- are rated on the basis of continuous duty operation

The differences between the EuP Motor regulation and IEC standard lie in the exceptions and in the additional operating mode, S3 (cyclic duration factor ≥ 80%).

The following are exempted from the EuP Motor Regulation:

a) Motors designed to operate wholly immersed in a liquid

b) Motors completely integrated into a product for which the energy efficiency cannot be measured independently of the product:

c) Motors that are specially designed for operation under the following conditions:

i) At altitudes exceeding 1,000 meters above sea level;

ii) Where ambient air temperatures exceed 40°C;

iii) At maximum operating temperatures above 400°C;

iv) Where ambient air temperatures are less than -15°C for any motor or less than 0°C for a motor with air cooling;

v) Where the water coolant temperature at the inlet to a product is less than 5°C or exceeding 25°C;

vi) In potentially explosive atmospheres as defined in Directive 94/9/EC of the European Parliament and the European Council

d) Brake motors

Effective Dates

- from 16 June 2011, motors placed on to the Market shall not be less efficient than the IE2 efficiency level;
- from 1 January 2015 motors placed on to the Market with a rated output of between 7.5kW and 375 kW shall not be less efficient than the IE3 efficiency level or meet the IE2 efficiency level and be equipped with a variable speed drive;
- from 1 January 2017 all motors placed on to the Market with a rated output of between 0.75kW and 375 kW shall not be less efficient than the IE3 efficiency level or meet the IE2 efficiency level and be equipped with a variable speed drive.

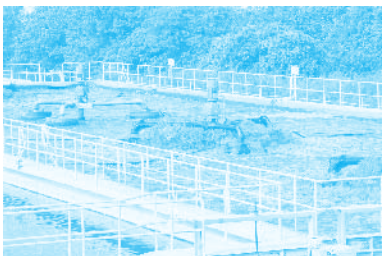

The IE3 Premium Efficiency versions of the W22 WIMES line are available now, well in advance of these 2015 / 2017 implementation dates.

This affords the End User the opportunity to select motors now which not only comply with the second stage of the EU Regulations, but offer increased levels of efficiency, lower running costs and reduced CO2 emissions.

The IE2 and IE3 efficiency levels determined in IEC 60034-30 are detailed in Table 1 below:

Output	IE2 - High Efficiency			IE3 - Premium Efficiency		
	Poles			Poles		
kW	2	4	6	2	4	6
0.75	77.4	79.6	75.9	80.7	82.5	78.9
1.1	79.6	81.4	78.1	82.7	84.1	81.0
1.5	81.3	82.8	79.8	84.2	85.3	82.5
2.2	83.2	84.3	81.8	85.9	86.7	84.3
3	84.6	85.5	83.3	87.1	87.7	85.6
4	85.8	86.6	84.6	88.1	88.6	86.8
5.5	87.0	87.7	86.0	89.2	89.6	88.0
7.5	88.1	88.7	87.2	90.1	90.4	89.1
11	89.4	89.8	88.7	91.2	91.4	90.3
15	90.3	90.6	89.7	91.9	92.1	91.2
18.5	90.9	91.2	90.4	92.4	92.6	91.7
22	91.3	91.6	90.9	92.7	93.0	92.2
30	92.0	92.3	91.7	93.3	93.6	92.9
37	92.5	92.7	92.2	93.7	93.9	93.3
45	92.9	93.1	92.7	94.0	94.2	93.7
55	93.2	93.5	93.1	94.3	94.6	94.1
75	93.8	94.0	93.7	94.7	95.0	94.6
90	94.1	94.2	94.0	95.0	95.2	94.9
110	94.3	94.5	94.3	95.2	95.4	95.1
132	94.6	94.7	94.6	95.4	95.6	95.4
160	94.8	94.9	94.8	95.6	95.8	95.6
200 up to 375	95.0	95.1	95.0	95.8	96.0	95.8

Table 1 - Efficiency levels

Figure 1 below shows the efficiency levels of W22 WIMES motors at 50 Hz comparing with the minimum levels established by IEC 60034-30 and adopted by the Water Industry Mechanical & Electrical Specification (WIMES) 3.03 issue 5, March 2010.

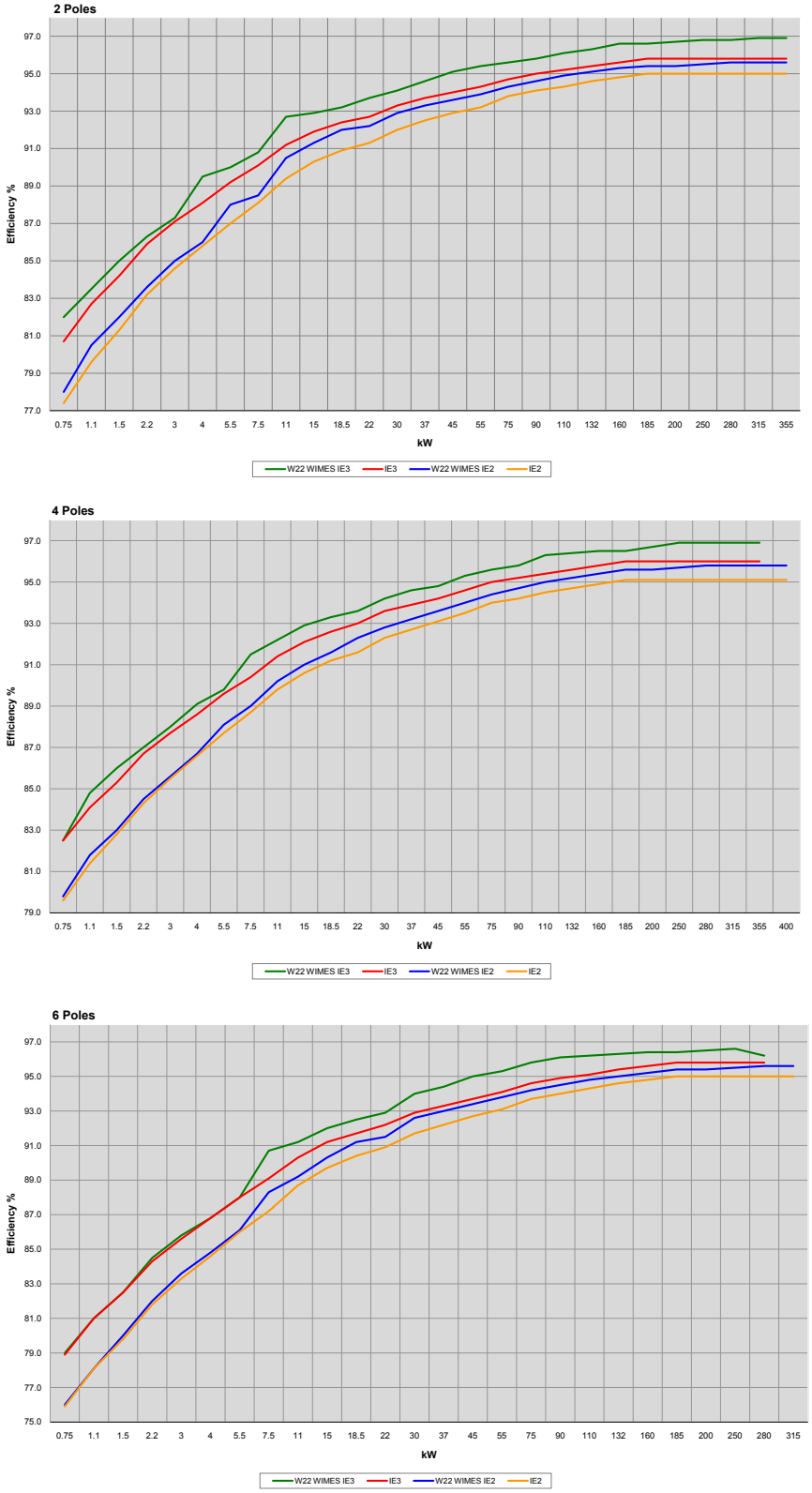

Figure 1 *Comparison of W22 WIMES motors with IEC 60034-30*

Nameplates

The nameplate for W22 WIMES motors details information relating to the motor construction and performance characteristics. Furthermore, in accordance with the requirements of IEC 60034-30 the efficiency level and IE code must also be displayed on the nameplate.

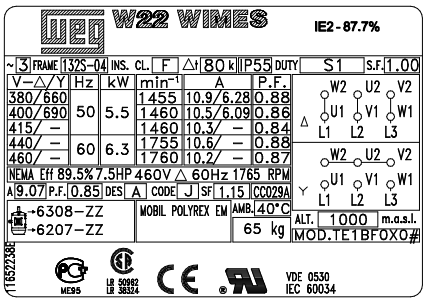

Figure 2 IE2 Nameplates

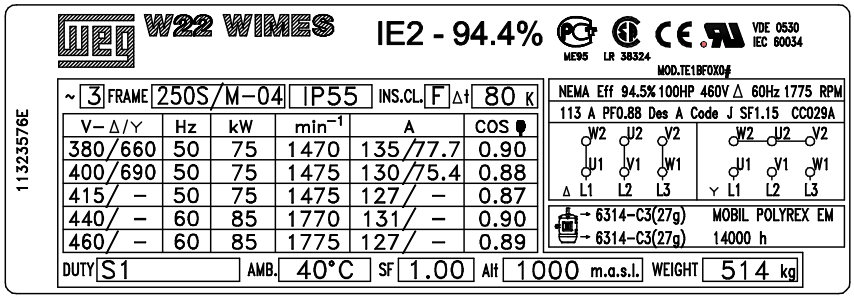

The nameplates for W22 WIMES motors provide the following information:

- Rated operating voltage, number of phases and operating frequency
- Service duty
- Efficiency level / IE code
- Frame size / designation
- Degree of protection
- Insulation class / temperature rise
- Motor rated power
- Full load speed (rpm)
- Rated operating current
- Power factor
- Ambient temperature and altitude
- Service factor
- Motor weight in kg
- Drive end / Non-drive end bearing specifications and amount of grease
- Grease type and relubrication intervals in hours
- Connection diagram
- Certification labels
- Serial number and manufacturing date

Product overview

Standard features

- Efficiency levels: High Efficiency (IE2) and Premium Efficiency (IE3)
- Stator frame, endshields and terminal boxes made from high grade FC-200 cast iron
- Cooling method: TEFC (Totally enclosed fan cooled) – IC411
- Rated output: 0.12 to 500 kW
- Number of Poles: 2, 4, 6 and 8
- Frame sizes: 63 up to 355A/B
- Frequency: 50 Hz
- Voltages: 220-240/380-415V (up to frame size 100L) / 380-415/660V (112M to 355A/B)
- Design N
- Service factor: 1.00
- Ambient temperature: -30°C to 40°C, at 1000 m.a.s.l.
- Relative humidity up to 95%
- Degree of protection: **IPW55**
- Class "F" insulation (ΔT=80 K)
- Mounting: B3T foot (with top terminal box)
- Continuous duty: S1
- Vibration level: Grade A as per IEC 60034-14
- External earth terminals
- Stainless steel nameplate AISI 316
- Fan Covers: Steel for frames 63 to 132M and Cast Iron for frames 160M to 355A/B
- WISE® (WEG Insulation System Evolution) insulation system - suitable for inverter duty applications*
- Insulated NDE bearing hubs as standard for frames 280S/M to 355A/B
- Thermistors (1 per phase) fitted as standard (frames 63 to 355A/B)
- Space heaters (dual voltage 110V and 230V) fitted as standard (frames 63 to 355A/B)
- Additional terminal box for thermistors and space heaters as standard with WIMES compliant heater warning label
- Metric threaded cable entries for mains and auxiliary terminal boxes
- Bearings:
  Metal shielded (ZZ) sealed for life bearings for frames 63 to 132
  Regreasing nipples for frames 160M to 355A/B
- Bearing / shaft seals:
  B3 motors - Oil seals for frames 63 to 200L / WSeal® for frames 225S/M to 355A/B
  B5 motors - Oil seals for frames 63 to 280S/M / Viton seals for frames 315S/M to 355A/B
- Painting: Two-pack epoxy paint finish (Plan 202E) for aggressive sheltered industrial environments
- Finish Colour:
  RAL 5010 (High Efficiency – IE2)
  RAL 6002 (Premium Efficiency – IE3)

* For additional details about Inverter operation, please contact our technical support team.

Optional available

- Mains terminal box on left or right side
- Oversized terminal box (frame 355A/B)
- Motors with Flange FF, C-DIN and superior / inferior
- Alternative voltages / frequencies
- Higher number of poles
- Design H
- Class "H" insulation
- Tropical protection for Relative Humidity >95%
- Vibration level: Grade B as per IEC 60034-14
- Provision for vibration detectors SPM
- Thermal protection: Thermostats or RTD (PT-100) in windings or bearings
- Degrees of protection: IP56, IP65, IP66
- Bearing / shaft seals: Taconite Labyrinth and W3 Seal®
- Cooling Fans: Aluminium, cast iron and bronze
- Drip cover for vertical applications
- Double shaft extension
- Stainless steel shaft
- Insulated DE or NDE bearings for frames 225S/M to 355A/B
- Encoders
- Forced ventilation TEBC (Totally Enclosed Blower Cooled)
- Roller bearings for high radial loads (frames 160M to 355A/B)
- Cable glands in plastic and brass
- Alternative painting plans for more aggressive environments
- WIMES compliant motors for hazardous environments (Ex d, Ex n etc)

W22 WIMES, the new electric motor concept

- Excellent cost versus benefit ratio
- Optimization of environmental resources
- Updated electrical features
- Noise level reduction
- Vibration level reduction
- Easier maintenance
- Improved efficiency levels
- 3 year warranty

Components Design

New Cooling System

Cooling Fan and Fan Cover
- Aerodynamic concept
- Noise level reduction
- Easier assembly
- Improved air flow distribution over frame
- Increased mechanical strength
- Provision for fitting encoder or drip covers
- Reduction of fan blades
- Reinforced fan hub structure
- Increased air flow
- Fan with greater rigidity
- Fewer fan configurations

Frame

Stator
- High grade FC-200 for resistance to impacts and corrosion
- Reduction in winding and bearing temperatures
- Noise level reduction

Vibration Sensors
- Provision for vibration sensors on frame and endshields

Lifting eyebolts
- Two eyebolts per motor (frames 100L and above)
- Higher mechanical resistance and safer handling

Solid feet
- Higher impact resistance
- Ideal for applications with higher vibration levels
- Easier installation and alignment

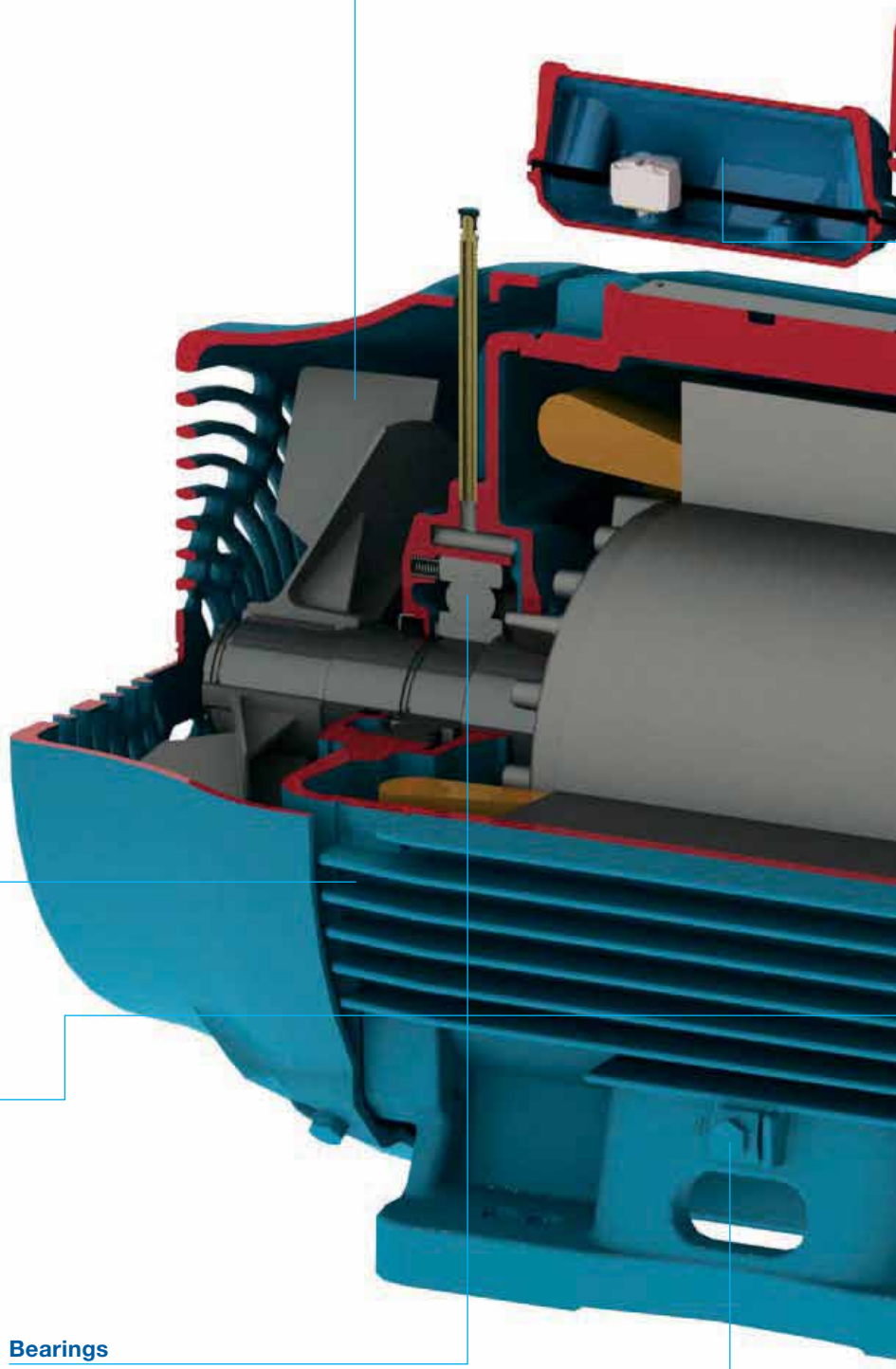

Endshields Subsystem

DE (Drive Endshield)
- New fin design for greater heat dissipation
- Bearing seating displaced outwards from the endshield
- Reinforced endshield structure
- Bolt protection

NDE (Non-Drive Endshield)
- New design with smooth surface
- Improved air flow circulation
- Noise level reduction
- Structure stiffening to avoid machining deformation
- Insulated NDE bearing hub (frames 280S/M to 355A/B) to prevent circulating shaft currents

Bearings
- Deep groove ball bearings
- Metal shielded (ZZ), sealed for life in frames 63 to 132M
- Bearing relubrication nipples and grease relief standard for frames 160M to 355A/B
- Polyrex EM grease

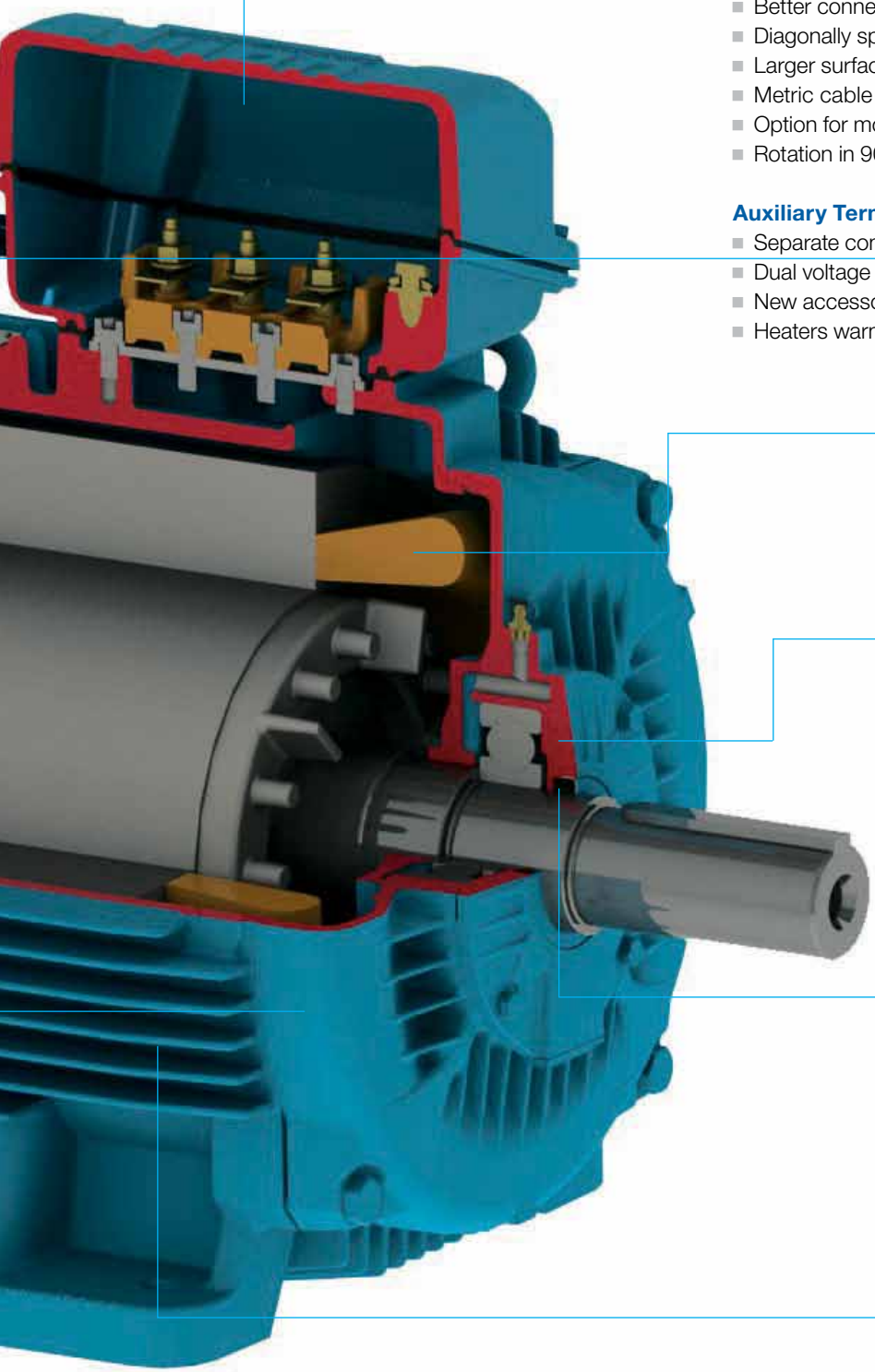

Terminal Boxes

Power Terminal Box

- Oriented towards front of the motor to improve heat dissipation (frames 225S/M to 355A/B
- Better connection quality / easier maintenance
- Diagonally split for easier cable handling
- Larger surface area on terminal box face for glands
- Metric cable entries
- Option for mounting B3T, B3R or B3L
- Rotation in 90° increments

Auxiliary Terminal

- Separate connection box for space heaters and PTC thermistors
- Dual voltage heaters 110V and 230V as standard
- New accessory connection system
- Heaters warning label according to WIMES

Windings

- Class F Insulation (80K rise)
- Suitable for inverter operation through exclusive WEG WISE® insulation system
- Equipped with 3 x PTC thermistors as standard

Bearing Caps

External

- Finned surface for improved bearing heat dissipation

Internal

- Modification of grease paths
- More efficient and imrpved quality of bearing lubrication
- Reduced bearing and grease temperatures

Sealing system

- Mechanical protection IPW55 (weatherproof)
- Exclusive WSeal® for frame sizes 225S/M to 355A/B (Foot mounted)
- Oilseals / Viton Seals for frame sizes 63 to 200 (foot mounted) & flange mounted models
- Increased dust and moisture protection
- Increased protection against high-pressure cleaning

Corrosion Protection

- Two-pack epoxy paint finish (dft 140-235µm for aggressive sheltered industrial environments

Earth Terminals

- Two earth terminals inside and adjacent to terminal box
- External earth terminal on motor frame

Design Details

New cooling system

Redesigned to provide improved air flow over the motor frame keeping low operational temperatures and assuring reliability and extended lifetime. The aerodynamic concept of the fan cover increases effective airflow, minimizing losses due to the recirculation of air between the fan and fan cover. The fan was designed to provide a tough structure and a reduced noise level. Motor terminal box (for frame sizes 225S/M to 355A/B) and eyebolts were repositioned to enable better airflow.

This new cooling system also contributes to:

- Cooler bearing temperature thus extending relubrication intervals.
- Lower Noise Level meeting the most demanding Health & Safety regulations.
- Lower Overall Operational Temperature resulting in a more efficient material usage.

Frame

The castings for the W22 motor are produced in WEG's own foundries using high grade FC-200 cast iron, affording high resistance to impacts and corrosion.

Solid and integral motor feet provide a more resistant structure against vibration.

Frame sizes 160M to 355A/B incorporate flat areas at both ends of the frame (and on each endshield) to permit vibration monitoring in both vertical and horizontal planes using hand held accelerometers. Optionally, M8 threads for the mounting of SPM devices can be supplied on request.

Summary of key benefits of the new W22 frame design:

- Motor temperature reduction
- Cooling fins designed to minimise accumulation of dusts and liquids
- Repositioned lifting eyebolts - easier handling
- Provision for vibration sensors on motor frame and endshields - easier and more reliable vibration analysis.
- Solid feet – integral to the motor frame, provide enhanced resistance against vibration / corrosion and offer easier alignment during installation.
- Impact resistance IK08 – mechanical impact of 5J – as per EN 62262

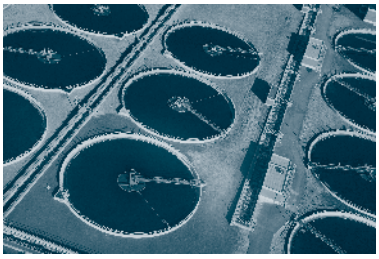

Terminal boxes

Increased internal space making the terminal block more accessible to the user ensuring easier and safe cable handling and cable connection. The dimensions are optimized to provide more space for the power supply cables and auxiliary connectors resulting in easier assembly.

For frame sizes 225S/M to 355A/B, the terminal box can be mounted on top, left or right side of the motor using the same frame, and was placed closer to the drive end resulting in bearing temperature and noise level reduction.

Anti Condensation Heaters

As standard, all W22 WIMES compliant motors are equipped with anti-condensation heaters suitable for either 110V or 230V power supplies, and with their connections terminated in separate heater terminal boxes.

For frame sizes 63-100 two separate heaters are fitted, one at 110V and the other at 230V, with connections made to independent terminal blocks. Frame sizes 112M to 355A/B are equipped with dual voltage heaters suitable for either 110V or 230V supplies via simple reconnection (in series or parallel) of the supply cables at the time of installation.

An appropriate heater warning label with wording as specified in WIMES 3.03 issue 5 is affixed to the motor.

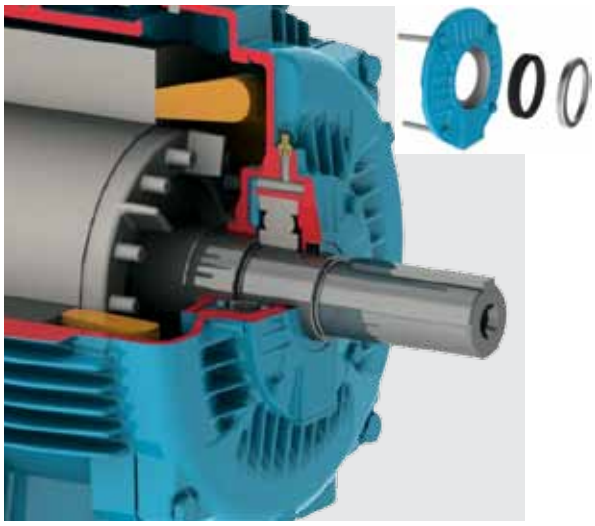

Exclusive shaft sealing system WSeal®

Foot mounted motors in frame sizes 225S/M to 355A/B are equipped with the exclusive WEG WSeal®, consisting of a double lipped V'Ring with a metallic cap. This configuration operates similarly to a labyrinth so preventing the ingress of water and dust into the motor. For frame sizes 63-200 and all flange mounted configurations the W22 WIMES motor line is equipped with nitrile rubber or Viton oilseals at either end.

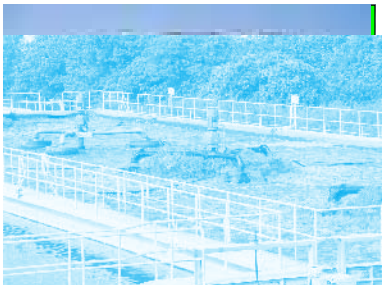

Variable Speed Drive Applications

Consideration regarding rated voltage

The stator windings of W22 WIMES motors are wound with class F insulation (class H optional) and are suitable for starting on sinusoidal supplies (eg DOL) or via a variable speed drive. They incorporate the WEG exclusive insulation system - WISE® (WEG Insulation System Evolution) – which ensures superior electrical insulation characteristics.

The stator winding is suitable for variable speed drive application, taking into account the limits shown in table 2.

Rated voltage				
220-240/380-415 V-50 Hz // 440-460 V-60 Hz				
Motor rated voltage	Peak voltage on motor terminals (phase to phase)	dV/dt on motor terminals (phase to phase)	Rise time	Time between pulses
Vn ≤ 460 V	≤ 1600 V	≤ 5200 V/µs	≥ 0.1 µs	≥ 6 µs
460 V < Vn ≤ 575 V	≤ 1800 V	≤ 6500 V/µs		
575 V < Vn ≤ 690 V	≤ 2200 V	≤ 7800 V/µs		

Table 2 – Limit conditions for variable frequency drive operation without application of a load reactor

Notes:

1 – For the three cases above the maximum recommended switching frequency is limited at 5 kHz.

2 – If one or more of the above conditions is not respected (including the switching frequency), an output filter (load reactor) must be installed on the output of the VSD.

3 – W22 WIMES motors with rated voltage up to 460V may be operated by a frequency inverter respecting the limits shown in table 2.

4 – W22 WIMES motors which at the time of purchase did not have any indication of operation with a frequency inverter, and with nominal voltage greater than 460 V, require special insulation to support the limits indicated in table 2. Otherwise the limits of the first line of the table (for nominal voltage up to 460 V) must be considered or a load reactor at the output of the VSD must be installed.

5 – W22 WIMES motors which at the time of purchase did not have any indication of operation with a frequency inverter, and which are the dual voltage type for example 400/690 V, may only be driven by a frequency inverter in the higher voltage with the installation of load reactor or otherwise respecting the limits of the first line of table 2 (for nominal voltage up to 460 V).

Restrictions regarding current flow through the bearings

Motors up to frame IEC 280S/M do not generally require additional features for variable frequency drive applications. From frame size 315S/M additional measures must be taken to avoid current flowing through the bearings, the solution for this problem being to use insulated bearings, insulated endshields or shaft grounding brushes.

However taking into consideration the requirements stipulated in clause 6.13.7 of WIMES 3.03 issue 5, for frame sizes 280S/M to 355A/B, W22 WIMES motors are provided as standard with insulated endshields at the non drive end.

Protection based on operating temperature

Motors operated with variable speed drives should be protected from overload either by a device integrated into the motor or via an independent protection system.

The most common means of protecting the motor from overload is to utilise PTC thermistors, which are thermal protectors consisting of semiconductor detectors with sudden variation of the resistance when reaching a certain temperature.

The W22 WIMES line offers the user the flexibility to utilise these motors with or without a variable speed drive through the standard provision of 3 x PTC thermistors 155°C (1 per phase) on all frame sizes 63 to 355A/B, considering the stipulation in WIMES 3.03 issue 5 (clause 6.2.3) that thermistors may not be retrofitted to the end windings after manufacture.

WEG can offer a matched W22 WIMES motor / CFW11 inverter package compliant with these technical criteria.

Drive and Motor Package Information CFW11 and W22 WIMES

The CFW11 is a system drive designed for the control of squirrel cage induction motors. It can be used in a wide range of applications, as it is designed for running on either Normal or Heavy Duty loads. Its performance is excellent, providing increased productivity and an improvement in the quality of the process in which it is used.

1.1 to 2.2kW - 1.5 to 3HP
200-240V - Single-phase

1.1 to 55kW - 1.5 to 75HP
200-240V - Three-phase

1.5 to 370kW - 2 to 600HP
380-480V - Three-phase

Innovative and simple

The CFW-11 presents many innovations that are helpful and beneficial to customers, mainly due to the simplicity of its installation and operation. The CFW-11 was developed based on Plug-and-Play philosophy (connect and use) allowing simple and fast installation of the VSD and its accessories. The Keypad has a navigation and programming system similar to mobile phones, with soft-key buttons. It is possible to access the parameters sequentially or through groups of parameters. The Keypad also makes the Oriented Start-up function available, guiding the user through the necessary programming.

Flexibility

The CFW-11 adapts to the customer's needs through a broad range of accessories which are easily installed. Besides this, the standard product comes with a small PLC called Soft PLC that offers PLC functionalities and it enables the customer to create his/her own user applications through the WLP software (programming in LADDER).

W22 WIMES - High Efficiency

Exceeds IE2 (1)

Output		Frame	Full load torque (Nm)	Locked rotor current Il/In	Locked rotor torque Tl/Tn	Break-down torque Tb/Tn	Inertia J (kgm²)	Allowable locked rotor time (s)		Weight (kg)	Sound dB (A)	400 V							
												Rated speed (rpm)	% of full load						Full load current In (A)
													Efficiency			Power factor			
kW	HP							Hot	Cold				50	75	100	50	75	100	
II Pole - 3000 rpm - 50 Hz																			
0.12	0.16	63	0.410	4.8	3.0	2.9	0.00010	37	81	5.7	52.0	2790	53.0	60.0	61.0	0.53	0.66	0.75	0.379
0.18	0.25	63	0.620	4.6	2.9	2.8	0.00010	28	62	6.2	52.0	2770	56.0	62.0	63.0	0.54	0.68	0.78	0.529
0.25	0.33	63	0.870	4.7	3.2	2.9	0.00020	24	53	6.7	52.0	2760	58.0	64.0	65.0	0.53	0.67	0.78	0.712
0.37	0.5	71	1.26	5.6	2.7	2.8	0.00030	21	46	6.5	56.0	2800	68.0	71.0	71.0	0.66	0.79	0.86	0.875
0.55	0.75	71	1.89	5.3	2.7	2.7	0.00040	15	33	8.5	56.0	2780	70.0	72.0	72.0	0.70	0.82	0.88	1.25
0.75	1	80	2.57	6.0	3.1	3.1	0.00070	22	48	12.5	59.0	2790	77.0	78.0	78.0	0.67	0.79	0.85	1.63
1.1	1.5	80	3.77	6.3	3.2	3.1	0.00080	18	40	14.0	59.0	2790	79.5	80.5	80.5	0.67	0.79	0.85	2.32
1.5	2	90S	5.07	5.9	2.6	2.6	0.0016	12	26	17.5	62.0	2825	81.5	82.0	82.0	0.66	0.78	0.84	3.14
2.2	3	90L	7.40	6.6	3.0	3.0	0.0022	9	20	21.0	64.0	2840	83.0	83.6	83.6	0.63	0.76	0.83	4.58
3	4	100L	9.95	7.7	2.9	3.1	0.0051	12	26	28.5	67.0	2880	84.0	85.0	85.0	0.68	0.80	0.86	5.92
4	5.5	112M	13.3	6.5	2.3	2.9	0.0066	16	35	38.0	64.0	2870	86.0	86.0	86.0	0.70	0.81	0.87	7.72
5.5	7.5	132S	18.1	6.8	2.2	3.0	0.0162	17	37	60.0	67.0	2910	86.5	88.0	88.0	0.68	0.79	0.85	10.6
7.5	10	132S	24.6	6.8	2.2	2.9	0.0198	13	29	63.0	67.0	2910	88.0	88.5	88.5	0.72	0.82	0.87	14.1
9.2	12.5	132M	30.2	7.6	2.5	3.2	0.0234	10	22	70.0	67.0	2915	88.5	89.0	89.0	0.70	0.81	0.86	17.3
11	15	160M	35.8	7.0	2.3	3.0	0.0337	13	29	104	67.0	2935	90.0	90.6	90.5	0.71	0.82	0.86	20.4
15	20	160M	48.9	7.0	2.3	3.0	0.0391	9	20	112	67.0	2930	91.0	91.3	91.3	0.71	0.81	0.86	27.6
18.5	25	160L	60.1	7.4	2.4	3.1	0.0472	8	18	124	67.0	2940	91.3	92.0	92.0	0.70	0.80	0.86	33.7
22	30	180M	71.4	7.3	2.2	3.0	0.0975	9	20	164	67.0	2945	92.0	92.4	92.2	0.76	0.84	0.88	39.1
30	40	200L	97.0	6.5	2.4	2.7	0.1703	17	37	226	72.0	2955	92.5	93.0	92.9	0.75	0.83	0.87	53.6
37	50	200L	120	6.8	2.4	2.6	0.2242	16	35	255	72.0	2950	93.0	93.4	93.3	0.76	0.84	0.87	65.8
45	60	225S/M	145	7.0	2.2	2.8	0.3250	12	26	356	75.0	2960	93.3	93.6	93.6	0.79	0.86	0.89	78.0
55	75	250S/M	178	7.0	2.2	2.8	0.3226	14	31	413	75.0	2960	93.6	93.9	93.9	0.79	0.86	0.89	95.0
75	100	280S/M	241	7.0	2.0	2.8	0.8541	28	62	630	77.0	2975	93.4	94.3	94.3	0.79	0.86	0.89	129
90	125	280S/M	289	7.0	2.0	2.8	0.9386	25	55	653	77.0	2975	94.0	94.6	94.6	0.79	0.86	0.89	154
110	150	315S/M	353	7.3	2.0	2.9	0.9691	24	53	874	77.0	2980	94.3	94.9	94.9	0.79	0.86	0.89	188
132	175	315S/M	423	7.3	2.0	2.9	1.14	21	46	931	77.0	2980	94.5	95.1	95.1	0.80	0.87	0.90	223
185	250	315S/M	593	7.6	2.2	3.1	1.42	16	35	1032	77.0	2980	94.9	95.5	95.4	0.80	0.86	0.89	314
200	270	315L	641	7.5	2.3	2.8	1.55	21	46	1175	78.0	2980	95.0	95.5	95.4	0.82	0.88	0.90	336
220	300	315L	705	7.8	2.4	2.8	5.17	14	31	1228	78.0	2980	95.0	95.5	95.5	0.81	0.87	0.90	369
250	340	315L	802	7.8	2.4	2.8	5.75	17	37	1316	78.0	2980	95.1	95.6	95.5	0.84	0.89	0.91	415
280	380	315L	898	7.9	2.3	2.8	5.75	12	26	1442	78.0	2980	95.2	95.6	95.6	0.85	0.89	0.91	465
315*	430	355M/L	1008	7.8	2.1	2.6	5.60	23	51	1777	80.0	2985	95.2	95.6	95.6	0.87	0.91	0.92	517
355*	480	355M/L	1136	7.9	2.2	2.8	6.01	14	31	1838	80.0	2985	95.3	95.6	95.6	0.87	0.90	0.91	589
400*	550	355A/B	1280	7.6	2.4	2.8	6.76	31	68	2043	83.0	2985	95.8	96.2	96.4	0.85	0.89	0.91	658
450*	610	355A/B	1440	7.5	2.5	2.7	7.40	31	68	2160	83.0	2985	95.8	96.2	96.6	0.85	0.90	0.91	739

Optional Frames																			
75	100	250S/M	242	8.2	2.4	3.0	0.4075	10	22	450	75.0	2965	94.0	94.3	94.3	0.79	0.86	0.90	128
110	150	280S/M	353	7.6	2.3	3.0	1.11	21	46	702	77.0	2975	94.5	94.9	94.9	0.78	0.86	0.89	188
200	270	315S/M	641	7.5	2.3	2.8	2.17	21	46	1175	77.0	2980	95.0	95.5	95.4	0.82	0.88	0.90	336
200	270	355M/L	640	7.6	1.9	2.7	3.99	22	48	1487	80.0	2985	94.8	95.5	95.5	0.83	0.88	0.90	336
220	300	355M/L	704	7.6	1.8	2.5	4.42	21	46	1560	80.0	2985	95.1	95.6	95.5	0.86	0.89	0.90	369
250	340	355M/L	800	7.9	2.2	2.8	4.85	20	44	1634	80.0	2985	95.2	95.6	95.6	0.86	0.89	0.91	415
280	380	355M/L	898	7.7	1.9	2.6	5.06	17	37	1669	80.0	2980	95.2	95.6	95.6	0.86	0.89	0.91	465

Notes:

(1) Efficiency values are given according to IEC 60034-2-1. They are calculated according to indirect method, with stray load losses determined by measurement.

(*) Fitted with air deflector in the drive end side.

W22 WIMES - High Efficiency

Exceeds IE2 (1)

Output		Frame	Full load torque (Nm)	Locked rotor current Il/In	Locked rotor torque Tl/Tn	Break-down torque Tb/Tn	Inertia J (kgm²)	Allowable locked rotor time (s)		Weight (kg)	Sound dB (A)	400 V							
												Rated speed (rpm)	% of full load						Full load current In (A)
													Efficiency			Power factor			
kW	HP							Hot	Cold				50	75	100	50	75	100	
IV pole - 1500 rpm - 50 Hz																			
0.12	0.16	63	0.830	3.9	1.8	2.0	0.00040	51	112	5.7	44.0	1380	55.0	58.0	59.0	0.54	0.67	0.77	0.381
0.18	0.25	63	1.25	4.3	2.2	2.2	0.00060	40	88	7.2	44.0	1380	59.0	61.0	61.0	0.55	0.68	0.77	0.553
0.25	0.33	71	1.76	4.0	2.1	2.2	0.00060	68	150	7.0	43.0	1360	63.0	66.0	66.0	0.54	0.67	0.76	0.719
0.37	0.5	71	2.59	4.2	2.5	2.5	0.00070	48	106	8.0	43.0	1365	65.0	68.0	68.0	0.50	0.64	0.73	1.08
0.55	0.75	80	3.73	5.8	2.4	2.8	0.0022	18	40	10.5	44.0	1410	75.0	76.5	76.5	0.61	0.74	0.82	1.27
0.75	1	80	5.08	6.0	2.6	2.9	0.0029	15	33	13.5	44.0	1410	79.0	79.6	79.8	0.63	0.76	0.83	1.63
1.1	1.5	90S	7.30	6.5	1.9	2.6	0.0049	14	31	19.0	49.0	1440	81.0	81.8	81.8	0.62	0.75	0.81	2.40
1.5	2	90L	9.95	6.3	2.0	2.8	0.0055	10	22	22.0	49.0	1440	81.5	83.0	83.0	0.57	0.72	0.80	3.26
2.2	3	100L	14.8	6.6	3.1	3.2	0.0082	16	35	30.5	53.0	1425	84.0	84.5	84.5	0.63	0.75	0.81	4.64
3	4	100L	20.2	6.5	3.2	3.3	0.0097	14	31	33.0	53.0	1420	85.0	85.6	85.6	0.64	0.76	0.82	6.17
4	5.5	112M	26.5	6.1	2.0	2.6	0.0156	13	29	42.0	56.0	1440	86.0	86.7	86.7	0.64	0.76	0.82	8.12
5.5	7.5	132S	36.0	7.3	1.9	3.0	0.0416	10	22	63.0	56.0	1460	88.0	88.1	88.1	0.69	0.81	0.86	10.5
7.5	10	132M	49.3	7.2	2.0	3.0	0.0528	8	18	72.0	56.0	1455	88.7	89.0	89.0	0.71	0.81	0.86	14.1
9.2	12.5	132M	60.4	7.7	2.2	3.2	0.0604	7	15	75.0	56.0	1455	89.2	89.5	89.5	0.70	0.81	0.86	17.3
11	15	160M	71.5	6.4	2.3	2.8	0.0730	10	22	105	61.0	1470	89.0	90.2	90.2	0.65	0.76	0.83	21.2
15	20	160L	97.8	6.2	2.3	2.8	0.0874	10	22	125	61.0	1465	90.6	91.0	91.0	0.66	0.76	0.83	28.7
18.5	25	180M	121	6.6	2.4	2.8	0.1657	14	31	164	61.0	1465	91.5	91.8	91.6	0.68	0.78	0.83	35.1
22	30	180L	143	6.8	2.6	2.9	0.2006	15	33	186	61.0	1465	92.2	92.5	92.3	0.70	0.80	0.85	40.5
30	40	200L	195	6.3	2.2	2.6	0.2929	16	35	222	65.0	1470	92.6	93.0	92.8	0.68	0.78	0.83	56.2
37	50	225S/M	240	6.6	2.2	2.7	0.6126	12	26	342	66.0	1475	93.0	93.2	93.2	0.74	0.83	0.86	66.6
45	60	225S/M	292	6.8	2.4	2.7	0.7147	10	22	363	66.0	1475	93.2	93.7	93.6	0.74	0.83	0.86	80.7
55	75	250S/M	356	6.4	2.2	2.7	0.8093	14	31	444	66.0	1475	93.6	93.9	94.0	0.75	0.84	0.87	97.1
75	100	280S/M	483	7.2	2.0	2.7	1.64	22	48	639	69.0	1485	93.8	94.4	94.4	0.74	0.83	0.86	133
90	125	280S/M	579	7.2	2.1	2.7	1.88	20	44	673	69.0	1485	94.1	94.7	94.7	0.76	0.84	0.87	158
110	150	315S/M	705	6.6	2.0	2.4	1.79	26	57	887	71.0	1490	94.3	95.0	95.0	0.74	0.83	0.86	194
132	175	315S/M	846	6.6	2.1	2.4	2.17	22	48	953	71.0	1490	94.6	95.2	95.2	0.76	0.84	0.87	230
160	220	315S/M	1026	6.6	2.2	2.4	2.48	20	44	1012	71.0	1490	94.8	95.4	95.4	0.77	0.84	0.87	278
185	250	315S/M	1186	6.8	2.4	2.4	2.78	18	40	1114	71.0	1490	94.9	95.6	95.6	0.75	0.83	0.86	325
200	270	315L	1283	6.7	2.4	2.4	3.93	17	37	1216	74.0	1490	95.0	95.6	95.6	0.77	0.84	0.87	347
220	300	315L	1411	7.0	2.6	2.4	6.86	14	31	1333	74.0	1490	95.2	95.7	95.7	0.76	0.84	0.87	381
250	340	315L	1603	7.0	2.6	2.4	8.12	13	29	1399	74.0	1490	95.3	95.7	95.7	0.77	0.85	0.88	428
280	380	315L	1796	7.2	2.6	2.4	9.02	12	26	1496	74.0	1490	95.4	95.8	95.8	0.76	0.84	0.87	485
315	430	355M/L	2020	7.2	2.4	2.4	8.95	14	31	1643	76.0	1490	95.5	95.8	95.8	0.74	0.82	0.86	552
355*	480	355M/L	2277	6.9	2.4	2.3	10.7	15	33	1752	76.0	1490	95.5	95.9	95.8	0.75	0.83	0.86	622
400*	550	355M/L	2565	7.3	2.6	2.4	11.6	11	24	1888	76.0	1490	95.5	95.9	95.8	0.74	0.82	0.86	701
450*	610	355A/B	2886	7.4	2.5	2.8	13.2	20	44	2089	76.0	1490	95.8	96.1	96.2	0.69	0.80	0.84	804
500*	680	355A/B**	3206	7.3	2.4	2.7	14.6	17	37	2246	76.0	1490	95.9	96.3	96.3	0.72	0.81	0.85	882

Optional frames																			
75	100	250S/M	486	7.2	2.4	2.9	1.05	10	22	496	66.0	1475	94.0	94.3	94.4	0.74	0.84	0.88	130
110	150	280S/M	708	7.6	2.4	2.9	2.27	18	40	735	69.0	1485	94.3	95.0	95.0	0.75	0.83	0.87	192
200	270	315S/M	1283	6.7	2.4	2.4	3.09	17	37	1216	71.0	1490	95.0	95.6	95.6	0.77	0.84	0.87	347
200	270	355M/L	1283	6.3	1.8	2.0	5.94	18	40	1404	76.0	1490	95.1	95.6	95.6	0.74	0.81	0.85	355
220	300	355M/L	1411	6.4	2.0	2.2	6.48	18	40	1441	76.0	1490	95.3	95.7	95.7	0.73	0.81	0.85	390
250	340	355M/L	1603	6.8	2.1	2.4	7.19	18	40	1470	76.0	1490	95.4	95.8	95.8	0.73	0.82	0.85	443
280	380	355M/L	1796	6.6	2.1	2.4	8.05	14	31	1510	76.0	1490	95.5	95.8	95.8	0.74	0.82	0.85	496

Notes:

(1) Efficiency values are given according to IEC 60034-2-1. They are calculated according to indirect method, with stray load losses determined by measurement.

(*) Fitted with air deflector in the drive end side.

(**) Class "F" insulation ΔT 105 K.

W22 WIMES - High Efficiency

Exceeds IE2 (1)

Output		Frame	Full load torque (Nm)	Locked rotor current Il/In	Locked rotor torque Tl/Tn	Break-down torque Tb/Tn	Inertia J (kgm²)	Allowable locked rotor time (s)		Weight (kg)	Sound dB (A)	400 V							
												Rated speed (rpm)	% of full load						Full load current In (A)
													Efficiency			Power factor			
kW	HP							Hot	Cold				50	75	100	50	75	100	
VI Pole - 1000 rpm - 50 Hz																			
0.12	0.16	63	1.27	3.0	1.9	2.0	0.00060	52	114	7.2	43.0	905	42.0	50.0	52.0	0.43	0.53	0.63	0.529
0.18	0.25	71	1.93	3.2	2.0	2.0	0.00080	96	211	9.5	43.0	890	52.0	58.0	59.0	0.40	0.51	0.61	0.722
0.25	0.33	71	2.65	3.2	2.2	2.1	0.00090	70	154	11.5	43.0	900	53.0	60.0	61.0	0.37	0.48	0.58	1.02
0.37	0.5	80	3.88	3.9	1.8	2.0	0.0022	27	59	10.5	43.0	910	63.0	67.0	67.0	0.51	0.66	0.76	1.05
0.55	0.75	80	5.77	4.1	2.0	2.2	0.0030	21	46	14.0	43.0	910	65.0	71.0	71.0	0.50	0.65	0.75	1.49
0.75	1	90S	7.75	4.5	2.0	2.1	0.0055	23	51	19.0	45.0	925	74.5	76.0	76.0	0.51	0.64	0.73	1.95
1.1	1.5	90L	11.4	4.7	2.3	2.2	0.0066	17	37	23.0	45.0	925	76.0	78.1	78.1	0.50	0.63	0.73	2.78
1.5	2	100L	15.3	5.0	2.0	2.4	0.0110	23	51	28.5	44.0	940	79.5	80.0	80.0	0.51	0.64	0.73	3.71
2.2	3	112M	22.4	5.0	2.1	2.3	0.0183	19	42	38.0	48.0	940	81.0	82.5	82.0	0.53	0.66	0.73	5.30
3	4	132S	29.9	5.7	2.0	2.4	0.0359	31	68	61.0	52.0	960	82.5	83.6	83.6	0.50	0.63	0.71	7.30
4	5.5	132M	39.8	6.0	2.1	2.5	0.0453	21	46	68.0	52.0	960	84.0	84.8	84.8	0.51	0.64	0.72	9.46
5.5	7.5	132M	54.7	6.4	2.2	2.7	0.0604	19	42	72.0	52.0	960	85.5	86.1	86.1	0.51	0.64	0.72	12.8
7.5	10	160M	73.9	5.8	2.0	2.6	0.0983	17	37	113	56.0	970	88.3	88.7	88.3	0.64	0.76	0.82	15.0
9.2	12.5	160L	90.6	6.0	2.2	2.6	0.1193	14	31	127	56.0	970	88.5	88.9	88.6	0.64	0.76	0.82	18.3
11	15	160L	108	6.0	2.3	2.7	0.1331	13	29	136	56.0	970	89.0	89.5	89.2	0.62	0.74	0.81	22.0
15	20	180L	148	7.0	2.4	3.0	0.2565	7	15	174	56.0	970	90.3	90.5	90.3	0.70	0.81	0.86	27.9
18.5	25	200L	181	5.7	2.1	2.5	0.3517	15	33	214	60.0	975	91.0	91.4	91.2	0.67	0.77	0.82	35.7
22	30	200L	216	6.0	2.2	2.7	0.4037	14	31	225	60.0	975	91.4	91.7	91.5	0.65	0.76	0.82	42.3
30	40	225S/M	291	6.8	2.1	2.5	0.9688	12	26	359	63.0	985	92.6	92.7	92.6	0.71	0.81	0.86	54.4
37	50	250S/M	359	6.7	2.2	2.5	1.10	16	35	438	64.0	985	93.0	93.2	93.0	0.73	0.82	0.86	66.8
45	60	280S/M	437	6.2	2.0	2.5	2.02	26	57	596	65.0	985	93.4	93.6	93.4	0.68	0.78	0.82	84.8
55	75	280S/M	534	6.2	2.0	2.4	2.36	22	48	629	65.0	985	93.6	93.9	93.8	0.68	0.79	0.83	102
75	100	315S/M	724	6.2	1.9	2.2	2.35	23	51	837	67.0	990	94.0	94.3	94.2	0.69	0.79	0.83	138
90	125	315S/M	869	6.0	1.9	2.1	2.79	22	48	893	67.0	990	94.4	94.6	94.5	0.72	0.80	0.84	164
110	150	315S/M	1062	6.1	2.0	2.2	3.35	20	44	966	67.0	990	94.5	94.9	94.8	0.72	0.80	0.84	199
132	175	315S/M	1274	6.4	2.2	2.4	3.90	17	37	1036	67.0	990	94.6	95.0	95.0	0.71	0.80	0.84	239
160	220	315L	1544	6.6	2.2	2.4	9.53	14	31	1228	68.0	990	94.8	95.2	95.2	0.70	0.80	0.84	289
185	250	315L	1786	6.9	2.3	2.4	10.2	12	26	1358	68.0	990	95.0	95.4	95.4	0.69	0.79	0.83	337
200	270	315L	1930	7.0	2.4	2.5	12.4	12	26	1488	68.0	990	95.1	95.4	95.4	0.69	0.79	0.83	365
220	300	315L	2123	6.8	2.3	2.3	13.8	14	31	1621	68.0	990	95.2	95.5	95.5	0.69	0.79	0.83	401
250	340	355M/L	2413	6.0	2.1	2.2	12.7	34	75	1789	73.0	990	95.3	95.5	95.5	0.66	0.76	0.81	466
280	380	355M/L	2702	6.2	2.2	2.2	13.9	27	59	1884	73.0	990	95.4	95.6	95.6	0.64	0.75	0.80	528
315*	430	355M/L	3025	6.2	2.2	2.2	15.0	28	62	1979	73.0	995	95.4	95.7	95.6	0.66	0.76	0.81	587
355*	480	355A/B	3426	6.2	2.0	2.3	17.1	29	64	2200	73.0	990	95.3	95.7	95.8	0.63	0.74	0.79	677
400*	550	355A/B**	3861	6.1	2.0	2.3	18.9	29	64	2346	73.0	990	95.4	95.8	95.9	0.63	0.74	0.79	762
Optional Frames																			
37	50	225S/M	359	6.8	2.1	2.5	1.20	11	24	390	63.0	985	93.0	93.2	93.0	0.72	0.81	0.86	66.8
45	60	250S/M	437	6.4	2.1	2.3	1.29	15	33	466	64.0	985	93.4	93.5	93.4	0.76	0.84	0.87	79.9
75	100	280S/M	724	6.4	2.0	2.4	3.03	17	37	702	65.0	990	93.9	94.3	94.2	0.69	0.79	0.84	137
160	220	355M/L	1544	5.9	1.8	2.0	8.34	34	75	1453	73.0	990	94.9	95.3	95.3	0.65	0.75	0.80	303
185	250	355M/L	1786	5.7	1.9	2.0	9.24	32	70	1521	73.0	990	95.1	95.4	95.4	0.65	0.75	0.80	350
200	270	355M/L	1930	6.5	2.1	2.3	10.9	28	62	1643	73.0	990	95.1	95.5	95.5	0.64	0.75	0.80	378
220	300	355M/L	2123	6.0	2.0	2.1	11.8	32	70	1795	73.0	990	95.3	95.5	95.5	0.65	0.75	0.80	416

Notes:

(1) Efficiency values are given according to IEC 60034-2-1. They are calculated according to indirect method, with stray load losses determined by measurement.

(*) Fitted with air deflector in the drive end side.

(**) Class "F" insulation ΔT 105 K.

W22 WIMES - High Efficiency

Output		Frame	Full load torque (Nm)	Locked rotor current Il/In	Locked rotor torque Tl/Tn	Break-down torque Tb/Tn	Inertia J (kgm²)	Allowable locked rotor time (s)		Weight (kg)	Sound dB (A)	400 V							
												Rated speed (rpm)	% of full load						Full load current In (A)
													Efficiency			Power factor			
kW	HP							Hot	Cold				50	75	100	50	75	100	
VIII pole - 750 rpm - 50 Hz																			
0.12	0.16	71	1.76	2.3	1.9	2.0	0.00080	172	378	9.5	41.0	650	40.0	48.0	50.0	0.35	0.43	0.52	0.666
0.18	0.25	80	2.57	3.1	1.9	2.1	0.0024	48	106	11.5	42.0	670	47.0	53.0	55.0	0.44	0.55	0.65	0.727
0.25	0.33	80	3.57	3.2	1.9	2.1	0.0029	42	92	13.5	42.0	670	49.0	55.0	57.0	0.43	0.55	0.66	0.959
0.37	0.5	90S	5.12	3.5	2.1	2.1	0.0044	37	81	18.0	43.0	690	56.0	62.0	62.0	0.41	0.52	0.62	1.39
0.55	0.75	90L	7.67	3.5	1.9	2.0	0.0060	31	68	22.0	43.0	685	61.0	64.0	64.0	0.44	0.56	0.66	1.88
0.75	1	100L	10.1	4.6	2.0	2.4	0.0110	42	92	28.5	50.0	710	71.0	74.0	74.0	0.40	0.52	0.62	2.36
1.1	1.5	100L	14.9	4.6	2.1	2.3	0.0127	29	64	30.5	50.0	705	71.0	75.0	75.0	0.40	0.53	0.62	3.41
1.5	2	112M	20.5	4.7	2.4	2.3	0.0202	29	64	39.0	46.0	700	77.0	79.0	79.0	0.44	0.57	0.67	4.09
2.2	3	132S	30.0	5.5	2.2	2.4	0.0592	25	55	62.0	48.0	700	81.0	81.5	81.0	0.52	0.65	0.72	5.44
3	4	132M	41.0	5.5	2.3	2.4	0.0740	19	42	66.0	48.0	700	82.0	82.5	82.0	0.54	0.66	0.73	7.23
4	5.5	160M	52.7	4.7	2.0	2.2	0.0842	29	64	107	51.0	725	84.0	85.0	85.0	0.52	0.65	0.72	9.43
5.5	7.5	160M	72.5	4.7	2.0	2.2	0.1149	21	46	120	51.0	725	85.0	86.0	85.5	0.52	0.65	0.73	12.7
7.5	10	160L	98.8	4.9	2.2	2.3	0.1436	22	48	139	51.0	725	86.0	87.0	87.0	0.52	0.65	0.73	17.0
9.2	12.5	180M	121	6.0	2.0	2.5	0.2033	11	24	156	51.0	725	88.0	88.0	87.5	0.63	0.75	0.82	18.5
11	15	180L	145	6.0	2.1	2.4	0.2439	11	24	175	51.0	725	88.0	88.5	88.0	0.67	0.77	0.83	21.7
15	20	200L	196	4.9	1.9	2.0	0.4220	30	66	226	53.0	730	90.0	90.5	90.0	0.58	0.70	0.76	31.7
18.5	25	225S/M	241	6.3	2.0	2.4	0.8328	17	37	339	56.0	735	91.5	91.9	91.7	0.65	0.77	0.82	35.5
22	30	225S/M	286	6.1	2.0	2.4	0.9702	16	35	358	56.0	735	91.7	92.0	92.0	0.67	0.78	0.81	42.6
30	40	250S/M	390	6.6	2.1	2.7	1.06	13	29	433	56.0	735	92.0	92.4	92.3	0.68	0.79	0.83	56.5
37	50	280S/M	478	5.6	1.8	2.1	2.26	26	57	614	59.0	740	93.0	93.5	93.5	0.64	0.74	0.80	71.4
45	60	280S/M	581	5.8	1.9	2.1	2.71	23	51	660	59.0	740	93.4	93.8	93.8	0.64	0.74	0.80	86.6
55	75	315S/M	710	5.8	1.8	2.1	2.48	32	70	851	62.0	740	93.7	94.2	94.2	0.66	0.76	0.80	105
75	100	315S/M	968	5.9	1.8	2.1	3.26	30	66	951	62.0	740	94.1	94.5	94.6	0.68	0.77	0.81	141
90	125	315S/M	1162	6.0	1.9	2.1	3.83	26	57	1020	62.0	740	94.4	94.7	94.7	0.68	0.77	0.81	169
110	150	315L	1420	6.0	1.9	2.1	12.6	28	62	1244	68.0	740	94.6	94.8	94.8	0.67	0.76	0.80	209
132	175	315L	1704	6.3	2.0	2.3	13.2	20	44	1352	68.0	740	94.8	95.1	95.1	0.64	0.75	0.80	250
160	220	355M/L	2052	6.0	1.5	2.3	14.4	54	119	1616	70.0	745	95.2	95.6	95.6	0.63	0.74	0.80	302
185	250	355M/L	2373	6.1	1.5	2.3	16.5	48	106	1691	70.0	745	95.2	95.6	95.6	0.62	0.72	0.78	358
200	270	355M/L	2565	6.3	1.6	2.3	18.4	48	106	1765	70.0	745	95.3	95.6	95.6	0.63	0.74	0.80	377
220	300	355M/L	2822	6.3	1.5	2.3	19.5	48	106	1875	70.0	745	95.4	95.7	95.7	0.63	0.74	0.79	420
250*	340	355A/B	3206	6.2	1.5	2.4	21.7	47	103	2092	70.0	745	95.1	95.7	95.8	0.62	0.73	0.79	477
280*	380	355A/B	3591	6.4	1.6	2.4	25.0	44	97	2279	70.0	745	95.1	95.7	95.8	0.61	0.73	0.79	534
Optional Frames																			
37	50	250S/M	484	7.5	2.1	2.6	1.66	12	26	570	56.0	730	92.5	93.0	93.0	0.66	0.77	0.82	70.0
55	75	280S/M	710	5.8	2.0	2.1	3.16	24	53	710	59.0	740	93.7	94.2	94.1	0.64	0.75	0.80	105
110	150	315S/M	1420	6.0	1.9	2.1	4.82	28	62	1300	62.0	740	94.6	94.8	94.8	0.67	0.76	0.80	209
110	150	355M/L	1411	5.8	1.3	2.1	10.4	48	106	1379	70.0	745	94.6	95.2	95.2	0.63	0.74	0.79	211
132	175	355M/L	1693	5.6	1.3	2.0	12.6	50	110	1473	70.0	745	95.0	95.5	95.4	0.64	0.75	0.80	250

Notes:

(1) Efficiency values are given according to IEC 60034-2-1. They are calculated according to indirect method, with stray load losses determined by measurement.
(*) Fitted with air deflector in the drive end side.

W22 WIMES - Premium Efficiency

Exceeds IE3 (1)

Output		Frame	Full load torque (Nm)	Locked rotor current Il/In	Locked rotor torque Tl/Tn	Break-down torque Tb/Tn	Inertia J (kgm²)	Allowable locked rotor time (s)		Weight (kg)	Sound dB (A)	400 V							
												Rated speed (rpm)	% of full load						Full load current In (A)
													Efficiency			Power factor			
kW	HP							Hot	Cold				50	75	100	50	75	100	
II Pole - 3000 rpm - 50 Hz																			
0.75	1	80	2.54	7.5	3.5	3.5	0.00080	25	55	13.5	59.0	2825	80.0	82.0	82.0	0.63	0.76	0.82	1.61
1.1	1.5	80	3.71	7.4	3.6	3.6	0.0015	23	51	15.0	59.0	2830	81.0	83.5	83.5	0.63	0.76	0.82	2.32
1.5	2	90S	4.99	7.6	3.3	3.3	0.0020	15	33	18.5	62.0	2875	83.0	85.0	85.0	0.64	0.76	0.83	3.07
2.2	3	90L	7.32	7.5	3.4	3.5	0.0026	12	26	23.5	62.0	2870	86.0	86.5	86.3	0.65	0.77	0.83	4.43
3	4	100L	9.85	8.5	3.4	3.4	0.0064	15	33	32.0	67.0	2910	85.5	87.3	87.3	0.69	0.81	0.86	5.77
4	5.5	112M	13.2	7.7	2.9	3.5	0.0080	22	48	41.0	64.0	2900	88.1	89.1	89.5	0.69	0.80	0.86	7.50
5.5	7.5	132S	17.9	8.3	2.6	3.2	0.0216	23	51	65.0	67.0	2930	88.3	89.7	90.0	0.72	0.82	0.87	10.1
7.5	10	132S	24.4	8.5	3.0	3.4	0.0252	17	37	69.0	67.0	2935	89.1	90.5	90.8	0.69	0.80	0.86	13.9
9.2	12.5	132M	30.0	8.5	2.9	3.3	0.0306	16	35	78.0	67.0	2930	90.4	91.1	91.1	0.75	0.84	0.88	16.6
11	15	160M	35.6	8.0	2.7	3.5	0.0419	17	37	115	67.0	2950	91.0	92.3	92.7	0.71	0.81	0.85	20.1
15	20	160M	48.6	8.0	2.6	3.3	0.0472	12	26	119	67.0	2950	91.5	92.5	92.9	0.71	0.81	0.86	27.1
18.5	25	160L	59.9	8.4	2.8	3.6	0.0555	8	18	136	67.0	2950	92.0	92.9	93.2	0.70	0.80	0.86	33.3
22	30	180M	71.1	8.0	2.5	3.3	0.1192	11	24	176	67.0	2955	92.5	93.3	93.7	0.73	0.82	0.87	39.0
30	40	200L	96.7	7.3	2.6	2.9	0.1873	20	44	244	69.0	2965	92.8	94.0	94.1	0.73	0.82	0.86	53.5
37	50	200L	119	7.3	2.6	2.9	0.2119	17	37	265	69.0	2965	93.3	94.0	94.6	0.73	0.82	0.86	65.6
45	60	225S/M	145	8.0	2.4	3.2	0.4415	12	26	416	74.0	2970	94.6	95.1	95.1	0.77	0.85	0.89	76.7
55	75	250S/M	177	7.9	2.5	2.9	0.4888	14	31	485	74.0	2965	94.9	95.3	95.4	0.81	0.87	0.89	93.5
75	100	280S/M	240	7.6	2.3	2.9	1.21	32	70	727	77.0	2980	94.5	95.3	95.6	0.82	0.88	0.90	126
90	125	280S/M	289	7.4	2.2	2.8	1.34	30	66	762	77.0	2980	94.8	95.6	95.8	0.84	0.89	0.90	151
110	150	315S/M	353	7.6	2.1	3.0	1.23	30	66	962	77.0	2980	94.7	95.7	96.1	0.80	0.87	0.89	186
132	175	315S/M	423	7.5	2.1	2.8	1.48	30	66	1048	77.0	2980	95.2	95.9	96.3	0.83	0.89	0.90	220
160	220	315S/M	513	7.9	2.3	2.8	1.74	24	53	1129	77.0	2980	95.6	96.2	96.6	0.83	0.89	0.91	263
185	250	315S/M	593	7.8	2.4	2.7	1.86	22	48	1197	77.0	2980	95.7	96.4	96.6	0.83	0.89	0.90	307
200	270	315L	641	8.2	2.6	2.8	2.17	17	37	1305	78.0	2980	96.0	96.5	96.7	0.83	0.89	0.90	332
220	300	315L	705	7.7	2.4	2.6	5.17	24	53	1370	78.0	2980	96.1	96.5	96.7	0.84	0.89	0.91	361
250	340	315L	802	7.8	2.5	2.7	4.56	17	37	1434	78.0	2980	96.4	96.6	96.8	0.86	0.90	0.91	410
280	380	315L	898	8.0	2.6	3.0	4.32	22	48	1510	78.0	2980	96.2	96.8	96.8	0.87	0.90	0.91	459
315*	430	355M/L	1010	7.7	2.1	2.5	6.01	18	40	1838	80.0	2980	96.4	96.8	96.9	0.87	0.90	0.91	516
Optional Frames																			
75	100	250S/M	242	7.9	2.5	2.8	0.5264	11	24	500	74.0	2965	95.0	95.3	95.4	0.83	0.87	0.89	127
110	150	280S/M	353	7.9	2.3	2.9	1.56	21	46	819	77.0	2980	94.8	95.7	96.0	0.82	0.88	0.90	184
200	270	355M/L	640	7.5	1.9	2.6	4.31	28	62	1537	80.0	2985	95.7	96.5	96.7	0.84	0.89	0.90	332
220	300	355M/L	704	7.7	2.0	2.7	4.61	22	48	1585	80.0	2985	95.8	96.5	96.7	0.85	0.88	0.90	365
250	340	355M/L	800	7.7	2.1	2.8	5.04	22	48	1665	80.0	2985	96.0	96.7	96.8	0.86	0.90	0.91	410
280	380	355M/L	898	7.5	2.0	2.4	5.58	20	44	1751	80.0	2980	96.2	96.7	96.8	0.88	0.90	0.91	459

Notes:

(1) Efficiency values are given according to IEC 60034-2-1. They are calculated according to indirect method, with stray load losses determined by measurement.

(*) Fitted with air deflector in the drive end side.

W22 WIMES - Premium Efficiency

Exceeds IE3 (1)

Output		Frame	Full load torque (Nm)	Locked rotor current Il/In	Locked rotor torque Tl/Tn	Break-down torque Tb/Tn	Inertia J (kgm²)	Allowable locked rotor time (s)		Weight (kg)	Sound dB (A)	400 V							
												Rated speed (rpm)	% of full load						Full load current In (A)
													Efficiency			Power factor			
kW	HP							Hot	Cold				50	75	100	50	75	100	
IV pole - 1500 rpm - 50 Hz																			
0.75	1	80	5.05	6.7	3.0	3.3	0.0035	18	40	14.5	44.0	1420	80.0	82.0	82.5	0.63	0.76	0.82	1.60
1.1	1.5	90S	7.22	7.6	2.5	3.3	0.0055	15	33	19.5	49.0	1455	83.0	84.5	84.8	0.59	0.72	0.80	2.34
1.5	2	90L	9.88	7.4	2.6	3.4	0.0066	13	29	23.0	49.0	1450	84.0	86.0	86.0	0.58	0.72	0.80	3.15
2.2	3	100L	14.7	7.4	3.2	3.5	0.0090	18	40	31.5	53.0	1435	86.5	87.0	87.0	0.60	0.73	0.80	4.56
3	4	L100L	19.9	7.8	3.5	3.7	0.0120	15	33	37.5	53.0	1440	87.0	88.0	88.0	0.60	0.73	0.80	6.15
4	5.5	112M	26.4	7.0	2.3	3.1	0.0182	15	33	44.0	56.0	1450	88.7	89.1	89.1	0.62	0.74	0.81	8.00
5.5	7.5	132S	35.9	8.5	2.4	3.4	0.0528	15	33	69.0	56.0	1465	90.0	90.7	90.7	0.67	0.79	0.85	10.3
7.5	10	132M	48.9	8.5	2.5	3.4	0.0642	13	29	78.0	56.0	1465	91.0	91.5	91.5	0.69	0.80	0.85	13.9
9.2	12.5	160M	59.6	7.2	2.5	3.0	0.0803	16	35	109	61.0	1475	90.0	91.4	91.8	0.66	0.77	0.83	17.4
11	15	160M	71.5	7.0	2.5	3.0	0.1004	17	37	123	61.0	1470	91.0	91.8	92.2	0.65	0.76	0.83	20.7
15	20	160L	97.5	7.3	2.7	3.2	0.1214	10	22	145	61.0	1470	91.8	92.5	93.0	0.65	0.76	0.82	28.4
18.5	25	180M	120	7.3	2.7	3.0	0.2001	20	44	180	61.0	1470	92.2	92.9	93.3	0.64	0.76	0.82	34.9
22	30	180L	143	7.3	2.8	3.3	0.2272	18	40	198	61.0	1470	92.4	93.0	93.6	0.66	0.77	0.83	40.9
30	40	200L	194	7.3	2.5	3.0	0.3469	16	35	243	63.0	1480	92.8	93.6	94.2	0.64	0.75	0.82	56.1
37	50	225S/M	239	7.8	2.7	3.0	0.8822	14	31	392	63.0	1480	94.0	94.6	94.6	0.72	0.81	0.86	65.6
45	60	225S/M	291	7.9	2.8	3.2	0.9530	13	29	420	63.0	1480	94.2	94.8	94.8	0.70	0.80	0.85	79.4
55	75	250S/M	355	7.9	2.8	3.3	1.11	14	31	507	64.0	1480	94.6	95.0	95.3	0.71	0.81	0.86	96.9
75	100	280S/M	483	7.6	2.3	2.8	2.25	26	57	729	69.0	1485	94.7	95.2	95.6	0.75	0.83	0.87	130
90	125	280S/M	579	7.4	2.3	2.8	2.55	25	55	777	69.0	1485	95.0	95.5	95.8	0.74	0.82	0.86	158
110	150	315S/M	705	7.5	2.6	2.7	2.47	30	66	1010	71.0	1490	95.4	95.9	96.3	0.74	0.83	0.86	192
132	175	315S/M	846	7.6	2.5	2.6	2.94	26	57	1095	71.0	1490	95.5	96.0	96.4	0.75	0.83	0.86	230
160	220	315S/M	1026	7.6	2.6	2.6	3.24	22	48	1152	71.0	1490	95.7	96.2	96.5	0.75	0.83	0.87	275
185	250	315S/M	1186	7.6	2.5	2.5	3.46	18	40	1222	71.0	1490	95.8	96.3	96.5	0.74	0.83	0.87	318
200	270	315L	1283	7.6	2.5	2.5	3.93	20	44	1332	73.0	1490	96.1	96.5	96.7	0.74	0.83	0.87	343
220	300	315L	1411	7.8	2.6	2.6	6.86	16	35	1430	73.0	1490	96.1	96.6	96.7	0.74	0.83	0.86	382
250	340	315L	1603	8.0	2.7	2.6	8.39	16	35	1527	73.0	1490	96.2	96.6	96.9	0.73	0.82	0.86	433
280	380	355M/L	1796	7.3	2.3	2.4	9.66	20	44	1695	74.0	1490	96.3	96.7	96.9	0.74	0.83	0.86	485
315	430	355M/L	2020	7.3	2.3	2.4	10.7	22	48	1772	74.0	1490	96.4	96.7	96.9	0.74	0.83	0.86	546
355*	480	355M/L	2277	7.2	2.4	2.5	11.6	15	33	1878	74.0	1490	96.5	96.8	96.9	0.74	0.83	0.86	615
Optional Frames																			
75	100	250S/M	484	8.4	2.8	3.3	1.21	8	18	531	64.0	1480	94.7	95.0	95.0	0.73	0.83	0.87	131
110	150	280S/M	708	7.6	2.4	2.8	3.25	24	53	884	69.0	1485	95.4	95.8	96.0	0.74	0.83	0.87	190
200	270	315S/M	1283	7.6	2.5	2.5	3.69	20	44	1332	71.0	1490	96.1	96.5	96.7	0.74	0.83	0.87	343
200	270	355M/L	1283	7.6	2.5	2.5	7.01	22	48	1495	74.0	1490	95.9	96.5	96.7	0.72	0.81	0.85	351
220	300	355M/L	1411	7.4	2.4	2.5	7.52	20	44	1554	74.0	1490	96.0	96.6	96.8	0.72	0.80	0.85	386
250	340	355M/L	1603	7.3	2.3	2.4	8.59	16	35	1621	74.0	1490	96.2	96.6	96.9	0.73	0.82	0.85	438

Notes:

(1) Efficiency values are given according to IEC 60034-2-1. They are calculated according to indirect method, with stray load losses determined by measurement.

(*) Fitted with air deflector in the drive end side.

W22 WIMES - Premium Efficiency

Exceeds IE3 (1)

Output		Frame	Full load torque (Nm)	Locked rotor current Il/In	Locked rotor torque Tl/Tn	Break-down torque Tb/Tn	Inertia J (kgm²)	Allowable locked rotor time (s)		Weight (kg)	Sound dB (A)	400 V							
												Rated speed (rpm)	% of full load						Full load current In (A)
													Efficiency			Power factor			
kW	HP							Hot	Cold				50	75	100	50	75	100	
VI Pole - 1000 rpm - 50 Hz																			
0.75	1	L90S	7.62	5.2	2.5	2.8	0.0066	31	68	22.0	45.0	940	76.5	79.0	79.0	0.49	0.62	0.71	1.93
1.1	1.5	100L	11.1	4.9	2.0	2.4	0.0110	32	70	28.5	44.0	945	80.5	81.0	81.0	0.51	0.65	0.73	2.69
1.5	2	100L	15.1	5.5	2.3	2.8	0.0143	31	68	32.0	44.0	950	81.5	82.5	82.5	0.49	0.62	0.71	3.70
2.2	3	112M	22.1	6.0	2.5	2.6	0.0257	26	57	42.0	48.0	950	83.0	84.5	84.5	0.53	0.64	0.72	5.22
3	4	132S	29.6	6.0	1.9	2.5	0.0453	28	62	61.0	53.0	970	86.5	88.0	88.0	0.52	0.65	0.73	6.74
4	5.5	132M	39.8	6.5	2.2	2.5	0.0566	30	66	66.0	52.0	960	86.0	86.8	86.8	0.53	0.66	0.74	8.99
5.5	7.5	132M/L	54.5	7.0	2.5	2.8	0.0755	26	57	80.0	52.0	965	86.5	88.0	88.0	0.50	0.64	0.72	12.5
7.5	10	160M	73.5	6.5	2.3	2.9	0.1221	20	44	122	56.0	975	89.3	90.3	90.7	0.63	0.74	0.81	14.7
9.2	12.5	160L	90.2	6.5	2.3	2.9	0.1436	18	40	137	56.0	975	90.0	90.6	91.0	0.64	0.75	0.81	18.0
11	15	160L	108	6.5	2.4	3.0	0.1580	16	35	143	56.0	975	90.0	90.8	91.2	0.62	0.74	0.81	21.5
15	20	180L	147	7.7	2.6	3.2	0.3240	10	22	193	56.0	975	91.3	91.7	92.0	0.65	0.78	0.84	28.0
18.5	25	200L	180	6.2	2.2	2.8	0.3861	19	42	223	60.0	980	91.7	92.3	92.5	0.65	0.76	0.82	35.2
22	30	200L	215	6.3	2.3	2.9	0.4563	18	40	240	60.0	980	92.0	92.6	92.9	0.65	0.76	0.82	41.7
30	40	225S/M	291	7.4	2.3	2.8	1.29	17	37	401	63.0	985	93.7	94.0	94.0	0.70	0.80	0.85	54.2
37	50	250S/M	359	7.4	2.3	2.7	1.42	17	37	486	64.0	985	94.0	94.4	94.4	0.72	0.81	0.85	66.6
45	60	280S/M	434	6.8	2.2	2.7	2.80	32	70	678	65.0	990	94.1	94.8	95.0	0.65	0.76	0.82	83.4
55	75	280S/M	531	6.7	2.2	2.7	3.25	28	62	723	65.0	990	94.5	95.0	95.3	0.67	0.77	0.82	102
75	100	315S/M	724	6.7	2.2	2.6	3.34	32	70	962	67.0	990	95.0	95.6	95.8	0.67	0.78	0.83	136
90	125	315S/M	869	6.7	2.2	2.5	4.00	34	75	1048	67.0	990	95.3	95.8	96.1	0.67	0.78	0.83	163
110	150	315S/M	1062	6.8	2.4	2.6	4.44	32	70	1106	67.0	990	95.5	96.0	96.2	0.67	0.78	0.83	199
132	175	315S/M	1274	7.2	2.5	2.7	5.11	26	57	1190	67.0	990	95.6	96.1	96.3	0.67	0.77	0.82	241
160	220	315L	1544	7.4	2.6	2.7	11.1	24	53	1448	68.0	990	95.7	96.2	96.4	0.67	0.78	0.83	289
185	250	355M/L	1786	6.6	2.2	2.4	11.1	34	75	1666	73.0	990	94.9	95.6	95.8	0.64	0.74	0.79	353
200	270	355M/L	1921	6.5	2.1	2.3	12.0	40	88	1739	73.0	995	95.4	96.0	96.2	0.64	0.75	0.80	375
220	300	355M/L	2113	6.5	2.2	2.3	13.4	36	79	1854	73.0	995	95.5	96.1	96.3	0.64	0.75	0.80	412
250	340	355M/L	2401	6.5	2.3	2.4	15.0	38	84	1970	73.0	995	95.5	96.1	96.3	0.64	0.75	0.80	468
280	380	355M/L	2689	5.5	2.0	2.4	15.0	38	84	1970	73.0	995	95.1	95.1	96.3	0.64	0.75	0.80	525
Optional Frames																			
45	60	250S/M	439	8.0	2.8	2.8	1.55	18	40	490	64.0	980	92.4	93.9	93.9	0.76	0.84	0.87	79.5
75	100	280S/M	724	8.0	3.0	3.5	4.48	8	18	725	65.0	990	94.8	95.3	95.5	0.63	0.75	0.80	142
160	220	355M/L	1544	6.5	2.1	2.3	10.2	33	73	1594	73.0	990	94.9	95.6	95.8	0.63	0.74	0.79	305

Notes:

(1) Efficiency values are given according to IEC 60034-2-1. They are calculated according to indirect method, with stray load losses determined by measurement.

W22 - Premium Efficiency

Output		Frame	Full load torque (Nm)	Locked rotor current Il/In	Locked rotor torque Tl/Tn	Break-down torque Tb/Tn	Inertia J (kgm²)	Allowable locked rotor time (s)		Weight (kg)	Sound dB (A)	400 V							
												Rated speed (rpm)	% of full load						Full load current In (A)
													Efficiency			Power factor			
kW	HP							Hot	Cold				50	75	100	50	75	100	
VIII pole - 750 rpm - 50 Hz																			
0.75	1	100L	10.1	4.6	1.9	2.3	0.0127	30	66	30.5	50.0	710	72.5	75.5	75.5	0.41	0.53	0.62	2.31
1.1	1.5	100L	14.9	4.6	2.1	2.4	0.0143	30	66	33.0	50.0	705	73.0	76.0	76.0	0.41	0.53	0.62	3.37
1.5	2	112M	20.3	5.0	2.5	2.8	0.0238	28	62	43.0	46.0	705	79.0	80.5	80.5	0.45	0.59	0.68	3.96
2.2	3	132S	29.6	6.2	2.3	2.5	0.0690	27	59	69.0	48.0	710	82.0	82.6	82.6	0.51	0.65	0.72	5.34
3	4	132M	40.4	6.4	2.4	2.6	0.0838	21	46	75.0	48.0	710	82.5	83.5	83.5	0.51	0.64	0.72	7.20
4	5.5	160M	52.7	5.0	2.1	2.3	0.1006	34	75	114	51.0	725	85.0	86.8	86.6	0.52	0.65	0.72	9.26
5.5	7.5	160M	72.5	5.0	2.1	2.3	0.1221	28	62	123	51.0	725	86.0	87.3	87.7	0.52	0.65	0.73	12.4
7.5	10	160L	98.2	5.3	2.2	2.5	0.1580	22	48	145	51.0	730	87.0	88.3	88.9	0.52	0.65	0.73	16.7
9.2	12.5	180M	121	6.0	2.0	2.6	0.2575	15	33	173	51.0	725	89.0	89.3	89.6	0.63	0.75	0.82	18.1
11	15	180L	145	6.5	2.3	2.7	0.2846	12	26	185	51.0	725	89.5	90.0	90.3	0.55	0.68	0.76	23.1
15	20	200L	196	4.9	1.9	2.1	0.4571	34	75	235	56.0	730	90.0	91.0	91.4	0.56	0.68	0.74	32.0
18.5	25	225S/M	241	6.5	1.7	2.5	1.11	28	62	377	56.0	735	93.0	93.0	92.7	0.63	0.75	0.81	35.6
22	30	225S/M	286	6.5	1.8	2.5	1.29	22	48	402	56.0	735	93.0	93.1	93.0	0.63	0.75	0.81	42.2
30	40	250S/M	390	7.4	1.9	2.8	1.43	18	40	490	56.0	735	93.3	93.3	93.2	0.66	0.77	0.83	56.0
37	50	280S/M	478	6.0	1.8	2.3	2.82	32	70	673	59.0	740	93.7	94.2	94.2	0.63	0.73	0.79	71.8
45	60	280S/M	581	6.0	1.8	2.2	3.49	30	66	741	59.0	740	94.0	94.5	94.5	0.63	0.73	0.79	87.0
55	75	315S/M	710	6.0	1.7	2.2	3.14	40	88	936	62.0	740	94.3	94.8	94.8	0.65	0.75	0.80	105
75	100	315S/M	968	6.0	1.8	2.2	4.03	40	88	1049	62.0	740	94.6	95.1	95.1	0.65	0.75	0.80	142
90	125	315S/M	1162	6.0	1.9	2.2	4.82	40	88	1149	62.0	740	94.9	95.2	95.3	0.65	0.75	0.80	170
110	150	315L	1420	6.0	1.9	2.2	12.6	35	77	1367	68.0	740	95.0	95.4	95.4	0.64	0.74	0.79	211
110	150	355M/L	1411	6.2	1.3	2.3	12.6	56	123	1484	70.0	745	95.1	95.4	95.4	0.62	0.74	0.79	211
132	175	315L	1704	6.0	2.0	2.3	13.2	34	75	1508	68.0	740	95.3	95.7	95.7	0.64	0.74	0.79	252
160	220	355M/L	2052	6.4	1.3	2.3	17.3	56	123	1747	70.0	745	95.4	95.8	96.0	0.64	0.75	0.80	301
185	250	355M/L	2373	6.3	1.3	2.3	18.5	56	123	1819	70.0	745	95.5	95.9	96.0	0.64	0.75	0.80	348
200	270	355M/L	2565	6.2	1.3	2.3	18.9	56	123	1891	70.0	745	95.6	96.1	96.1	0.65	0.76	0.80	375
Optional Frames																			
37	50	250S/M	481	8.5	2.8	3.3	1.61	12	26	550	56.0	735	93.4	93.8	93.8	0.60	0.72	0.79	72.1
55	75	280S/M	710	7.0	2.0	2.5	3.38	26	57	812	59.0	740	94.0	94.5	94.5	0.60	0.71	0.77	109
110	150	315S/M	1420	6.0	1.9	2.2	12.6	35	77	1367	62.0	740	95.0	95.4	95.4	0.64	0.74	0.79	211
132	175	355M/L	1693	6.2	1.3	2.3	14.4	48	106	1587	70.0	745	95.3	95.7	95.7	0.64	0.74	0.79	252

Notes:

(1) Efficiency values are given according to IEC 60034-2-1. They are calculated according to indirect method, with stray load losses determined by measurement.

Mechanical Data

Foot mounted motors - B3T*

Frames 63 to 112

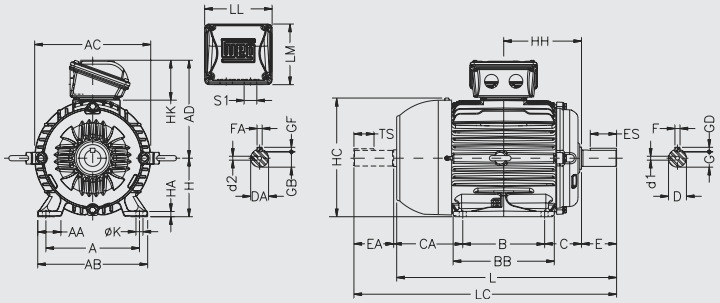

Frames 132 to 200

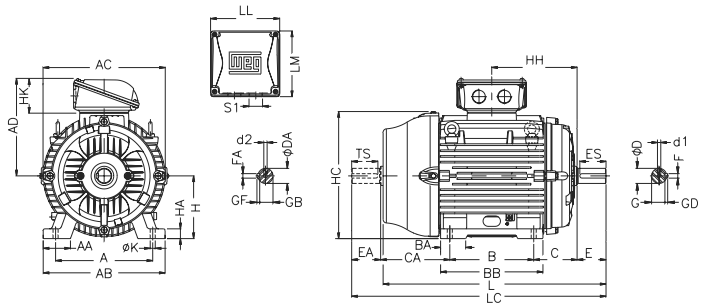

Frames 225 to 355M/L

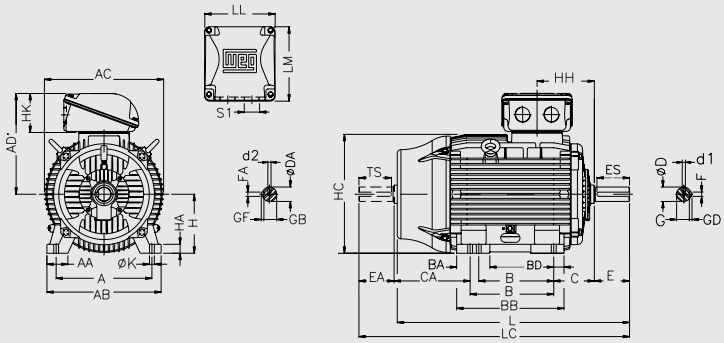

Frame 355M/L (only for motors fitted with air deflector in the drive end side)

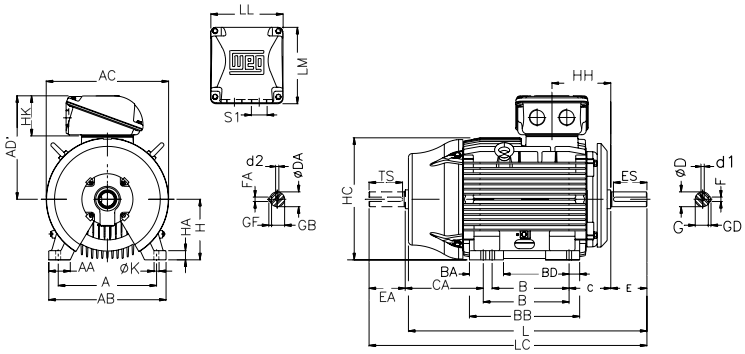

Frame 355A/B

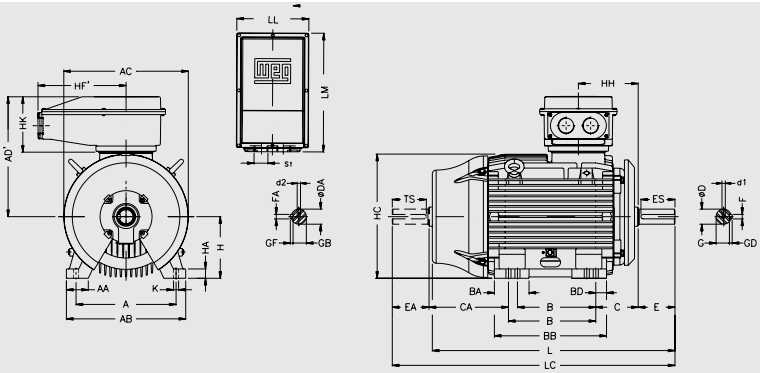

** For dimensions of Foot Mounted Motors in B3R / B3L configurations visit www.weg.net*

General Dimensions

Frame	A	AA	AB	AC	AD (***)	AD'	B	BA	BB	BD	C	CA	Shaft D	Shaft DA	Shaft E	Shaft EA	Shaft ES	Shaft F	Shaft FA	Shaft G	Shaft GB	Shaft GD	Shaft GF	Shaft TS
63	100	25.5	116	125	122	122	80		95		40	78	11j6	9j6	23	20	14	4	3	8.5	7.2	4	3	12
71	112	28.5	132	141	130	130	90		113.5		45	88	14j6	11j6	30	23	18	5	4	11	8.5	5	4	14
80	125	30.5	149	159	139	139	100		125.5		50	93	19j6	14j6	40	30	28	6		15.5	11	6		18
L80(**)																								
90S	140	36.5	164	179	157	157		-	131		56	104	24j6	16j6	50	40	36	8	5	20	13	7	5	28
L90S(**)																								
90L							125		156															
L90L(**)																								
100L	160	40	188	199	167	167	140		173		63	118	28j6	22j6	60	50	45		6	24	18.5		6	36
L100L(**)																								
112M	190	40.5	220	222	192	192			177	-	70	128		24j6					8		20		7	
L112M(**)																								
132S	216	51	248	271	218	218		55	187		89	150	38k6	28j6	80	60	63	10		33	24	8		45
132M							178		225															
132M/L																								
160M	254	64	308	329	264	264	210	63	254		108	174	42k6	42k6	110	110	80	12	12	37	37		8	80
160L							254		298															
180M	279	78	350	360	279	279	241	70	294		121	200	48k6	48k6				14	14	42.5	42.5	9	9	
180L							279		332															
200M	318	82	385	402	317	317	267	82	332		133	222	55m6					16		49		10		
200L							305		370															
225S/M	356	80	436	455	408	384	286/311	124	412	41	149	319/294	55m6*	55m6*	110*	110*	100*	16*	16*	49*	49*	10*	10*	100*
													60m6	60m6	140	140	125	18	18	53	53	11	11	125
250S/M	406	100	506	486		402	311/349	146	467	59	168	354/316	60m6*	60m6*	140*	140*	125*	18*	18*	53*	53*	11*	11*	125*
													65m6	60m6	140	140	125	18	18	58	53	11	11	125
280S/M	457		557	599	442	472	368/419	151	517	49	190	385/334	65m6*	60m6*	140*	140*	125*	18*	18*	58*	53*	11*	11*	125*
													75m6	65m6	140	140	125	20	18	67.5	58	12	11	125
315S/M	508	120	630	657	525	530	406/457	184	621	70	216	494/443	65m6*	60m6*	140*	140*	125*	18*	18*	58*	53*	11*	11*	125*
													80m6	65m6	170	140	160	22	18	71	58	14	14	125
315L					589	575	508	219	752	81		497	65m6*	60m6*	140*	140*	125*	18*	18*	58*	53*	11*	11*	125*
													80m6	65m6	170	140	160	22	18	71	58	14	14	125
355M/L	610	140	750	736	609	625	560/630	230	760	65	254	483/413	75m6*	60m6*	140*	140*	125*	20*	18*	67.5*	53*	12*	11*	125*
													100m6	80m6	210	170	200	28	22	90	71	16	14	160
355A/B					701	755	710/800	325	955	70		528/438	75m6*	60m6*	140*	140*	125*	20*	18*	67.5*	53*	12*	11*	125*
													100m6	80m6	210	170	200	28	22	90	71	16	14	160

Frame	H	HA	HB (***)	HC	HD(***)	HF (***)	HG (***)	HH	HK	K	L	LC	LL	LM	S1	d1	d2	Bearings D.E.	Bearings N.D.E.
63	63	7	25.5	129	-	68.5	-	80	59	7	216	241	108	98	2xM20x1.5	M4	M3	6201 - ZZ	
71	71		33	145		76		90			248	276				M5	M4	6202 - ZZ	
80	80	8	43.5	163		87		100		10	276	313				M6		6204 - ZZ	6203 - ZZ
L80(**)											325	362							
90S	90	9	45	182		90		106	67		304	350	115	104	2xM25x1.5	M8	M6	6205 - ZZ	6204 - ZZ
L90S(**)											335	381							
90L								118.5			329	375							
L90L(**)											360	406							
100L	100	10	61.5	205	244	106.4		133		12	376	431				M10	M8	6206 - ZZ	6205 - ZZ
L100L(**)											420	475							
112M	112		54.5	235	280	112		140	79		393	448	140	133	2xM32x1.5			6207 - ZZ	6206 - ZZ
L112M(**)											423	478							
132S	132	20	75	266	319	132		159			452	519				M12	M10	6308 - ZZ	6207 - ZZ
132M								178			490	557							
132M/L								191			515	582							
160M	160	22	79	327	374	168		213	100	14.5	598	712	198	188	2xM40x1.5	M16	M16	6309 - C3	6209 - Z-C3
160L								235			642	756							
180M	180	28	92	363	413	180		241.5			664	782						6311 - C3	6211- Z-C3
180L								260.5			702	820							
200M	200	30	119	405	464	218		266.5	118	18.5	729	842	228	217	2xM50x1.5	M20	M20	6312 C3	6212 Z-C3
200L								285.5			767	880							
225S/M	225	34	255	453	550	403	523	212	143		856*	974*	261	292				6314 - C3	
											886	1034							
250S/M	250	43	290	493	583	449	566	214		24	965	1113			2xM63x1.5				
280S/M	280	42	383	580	696	550	667	266	145		1071	1223	314	312				6316 - C3	
315S/M	315	48	386	664	768	615	744	264	177	28	1244*	1392*	372	382				6314 - C3	
											1274	1426						6319 - C3	6316 - C3
315L			336		774	575	760	284	215		1353*	1505*	404	438				6314 - C3	
											1383	1535						6319 - C3	6316 - C3
355M/L	355	50	426	723	863	665	847	340			1412*	1577*						6316 - C3	6314 - C3
											1482	1677				M24		6322 - C3	6319 - C3
355A/B			154		885				318*		1607*	1772*	443	730		M20*		6316 - C3	6314 - C3
									355		1677	1872				M24		6322 - C3	6319 - C3

Notes:
(*) Dimension applicable to 2 pole motors
(**) Applicable to specific long core designs
(***) Dimension is applicable to right or left terminal box mounting

Flange mounted motors

"FF" Flange

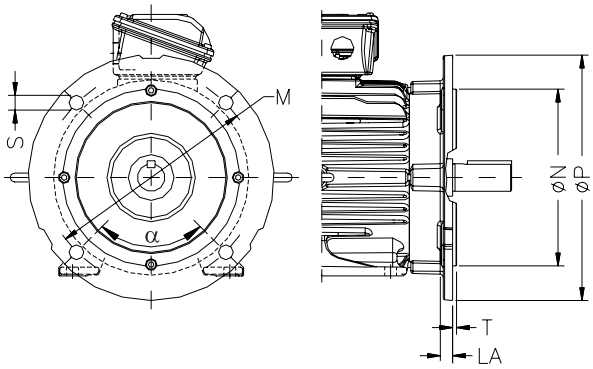

Flange "FF"									
Frame	Flange	LA	M	N	P	S	T	α	Nº of holes
63	FF-115	9	115	95	140	10	3	45°	4
71	FF-130		130	110	160		3,5		
80	FF-165	10	165	130	200	12			
90									
100	FF-215	11	215	180	250	15	4		
112									
132	FF-265	12	265	230	300				
160	FF-300	18	300	250	350	19	5		
180									
200	FF-350		350	300	400				
225	FF-400	18	400	350	450	19	5	22°30'	8
250	FF-500		500	450	550				
280									
315	FF-600	22	600	550	660	24	6		
355	FF-740		740	680	800/880*				

**Only for motors fitted with air deflector in drive end side.*

"C-DIN" Flange

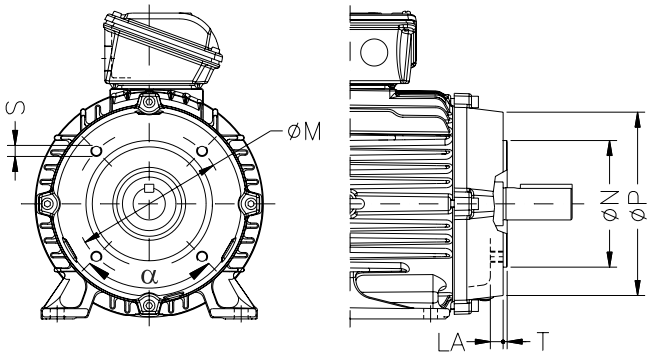

Frame	Flange	LA	M	N	P	S	T	α	N° of holes
63	C-90	9.5	75	60	90	M5	2.5	45°	4
71	C-105	8	85	70	105	M6			
80	C-120	10.5	100	80	120		3		
90	C-140	12	115	95	140	M8			
100	C-160	13.5	130	110	160		3.5		
112									
132	C-200	15.5	165	130	200	M10			

Terminal Box Drawings

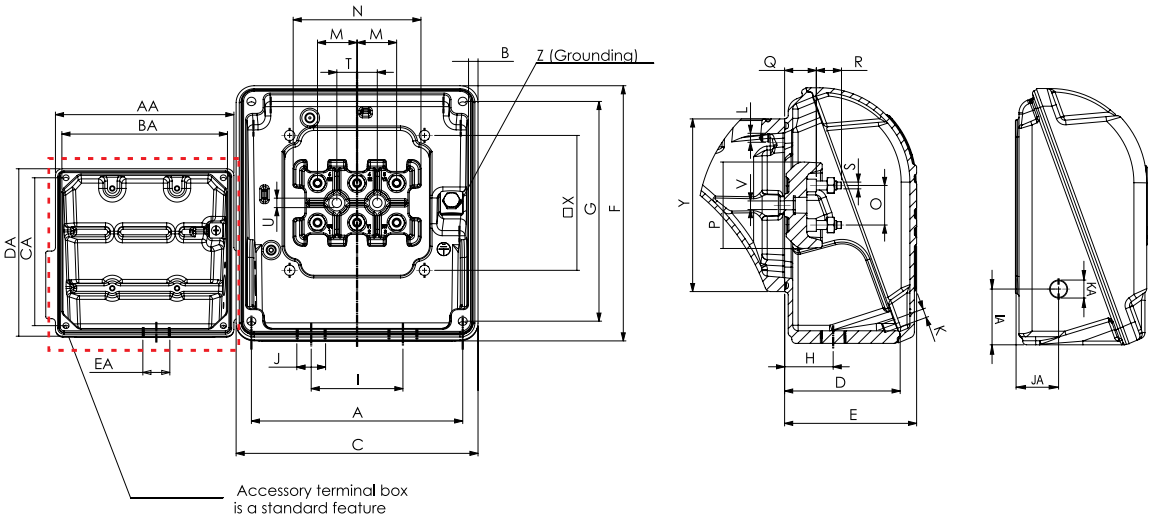

Frame	A	B	C	D	E	F	G	H	I	J	K	L	M	N	O	P	Q	R	S	T	U
63	90	3.5	108.5	51.5	59	96	85	27	42	2xM20x1.5	M5x0.8	M5x0.8	16	75	16	35	13.5	12	M4x0.7	20	5.8
71																					
80																					
90	98	3	114.5	59.5	67	101	91	31		2xM25x1.5											
100																					
112	117	2.5	138	71	80	130.5	117	36.5	54	2xM32x1.5	M6x1.0	M6x1.0	23	55	23	52	17	16	M5x0.8	23	6.5
132																					
160	175	4	198	90	100.5	187.5	175	49	84	2xM40x1.5	M8x1.25	M8x1.25	28	90	28	60	21.5	20.5	M6x1	28	6.6
180																					
200	204	4.5	228	107	118	216	204	59	94	2xM50x1.5			35	112	35	74	24	24	M8x1.25	35	9.5
225S/M	235	12.5	269	133	153	301	260	71	110		M10x1.5	M10x1.5	44	140	44	94	28	28	M10x1.5	45	10.5
250S/M																					
280S/M	275	13.5	314			311	275		126	2xM63x1.5	M12x1.75	M12x1.75	45	153	45	108	34	40	M12x1.75		
315S/M	340	14.5	379	162	182	390	345	78	160												
315L	365		404	202	226	422	390	97	200			M14x2.0	65	210	65	146	48	48	M16x2.0	65	
355M/L																					
355A/B**	415	-	442	267 232*	355 318*	729	678	187 152*	140		M10x1.5	M12x1.75	80	-	105	-	-	-	M20x2.5	-	-

Frame	V	X	Y	Z	AA	BA	CA	DA	EA	IA	JA	KA	Max number of connectors	
													Main	Accessories
63	M5x0.8	56	77	0.5-6 mm²	109	90	85	98	M20x1.5	-	-	-	4	16
71			78											
80			81											
90			77											
100			81											
112		70	107	2-10 mm²									6	
132			103											
160	M6x1.0	110	140	5.2-25 mm²	139	117	117	133		47	40	M20x1.5	12	26
180														
200	M8x1.25	120	155	5.2-35 mm²						47	45			
225S/M	M10x1.5	150	192	25-50 mm²	198	175	175	189		62	48			
250S/M			197										16	
280S/M			204	35-70 mm²						77	56			
315S/M		200	260							82	69			
315L		260	300	85-120 mm²						97	79			
355M/L														
355A/B**	-	290								-	-	-	-	

Notes:

** Dimension is applicable to right or left terminal box mounting*

*** Oversized terminal box*

Drip Cover Data

The utilization of a rain canopy / drip cover generally for vertical shaft down applications increases the total length of the motor. The additional length (dimension CH) to be considered is detailed in the table below.

Figure 3 – Motor with rain canopy / drip cover

Frame	Dimension CH [increase motor length (mm)]
63	18
71	
80	
90	
100	28
112	31
132	
160	47
180	57
200	67
225S/M	81
250S/M	
280S/M	91
315S/M	
315L	
355M/L	
355A/B	

Notes

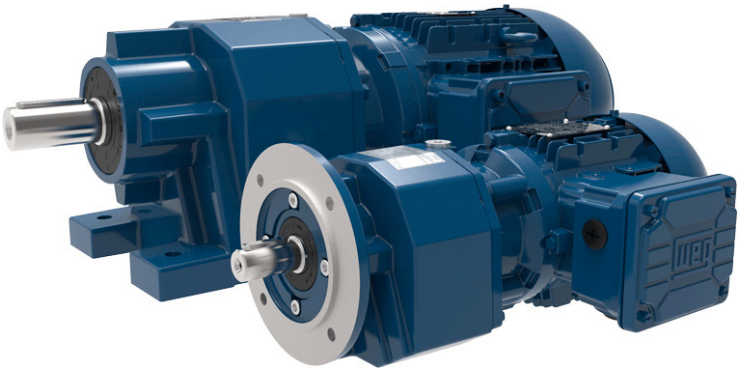

iMAG
INDUSTRIAL MOTORS
AND GEARS LIMITED

Industrial Motors and Gears Limited

Tel. 01642 467999 | Mob. 07815 889460
Fax. 01642 467988
Email. sales@imag-uk.com
Web. www.imag-uk.com

The Quality Choice

Industrial Motors and Gears Limited is a limited company
registered in England and Wales.
Registration Number 4293316.
VAT Registration Number 780154731.