radicon

with you at every turn

Series X Flexible Couplings

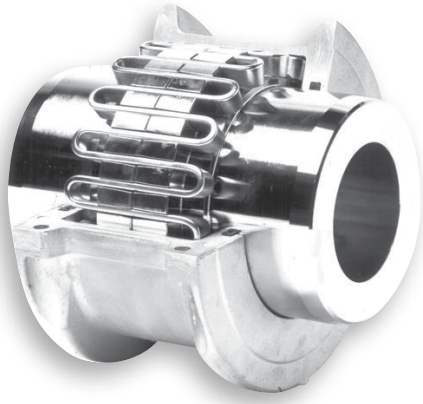

Flexible Couplings
CX-2.00GB1211

PRODUCTS IN THE RANGE

Serving an entire spectrum of mechanical drive applications from food, energy, mining and metal; to automotive, aerospace and marine propulsion, we are here to make a positive difference to the supply of drive solutions.

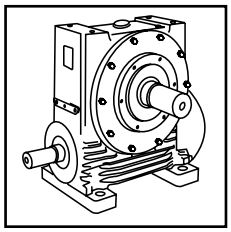

Series A
Worm Gear units and geared motors in single & double reduction types

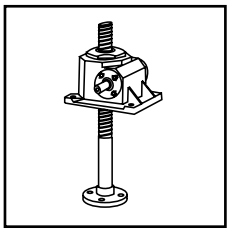

Series BD
Screwjack worm gear unit

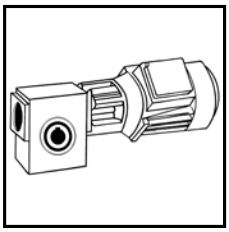

Series BS
Worm gear unit

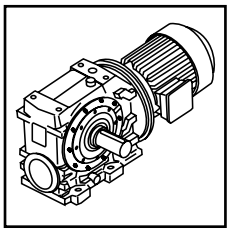

Series C
Right angle drive helical worm geared motors & reducers

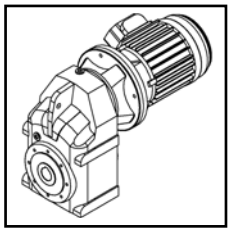

Series F
Parallel angle helical bevel helical geared motors & reducers

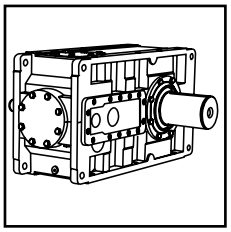

Series G
Helical parallel shaft & bevel helical right angle drive gear units

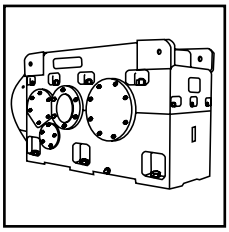

Series H
Large helical parallel shaft & bevel helical right angle drive units

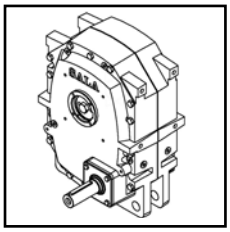

Series J
Shaft mounted helical speed reducers

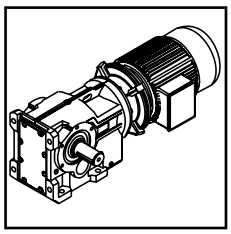

Series K
Right angle helical bevel helical geared motors & reducers

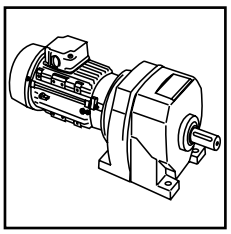

Series M
In-line helical geared motors & reducers

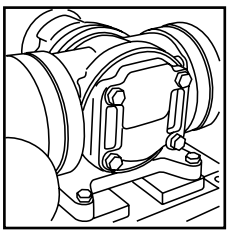

Roloid Gear Pump
Lubrication and fluid transportation pump

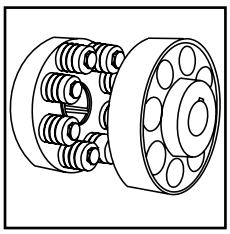

Series X
Cone Ring
Pin and bush elastomer coupling

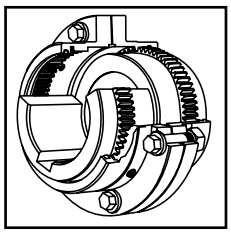

Series X
Gear
Torsionally rigid, high torque coupling

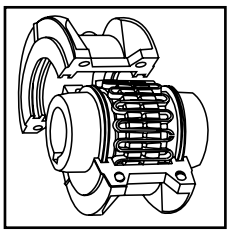

Series X
Grid
Double flexing steel grid coupling

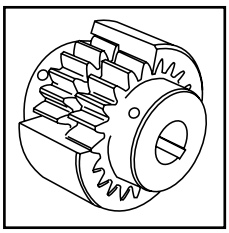

Series X
Nylicon
Gear coupling with nylon sleeve

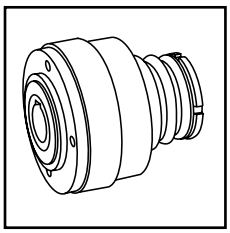

Series X
Torque Limiter
Overload protection device

We offer a wide range of repair services and many years experience of repairing demanding and highly critical transmissions in numerous industries.

We can create custom engineered transmission solutions of any size and configuration.

ATEX
Compliance Assured

Total compliance with the ATEX Directive safeguarding the use of industrial equipment in potentially explosive atmospheres is assured for users of our geared products.

Certification is available for standard gearboxes and geared motors with badging displaying the CE Mark and the Ex mark, name and location of the manufacturer, designation of series or type, serial number, year of manufacture, Ex symbol and equipment group/category.

ATEX directive 94/9/EC (also known as ATEX 95 or ATEX 100A) and the CE Marking Directive are enforced in all EC member states. Compliance is compulsory for designers, manufacturers or suppliers of electrical and non-electrical equipment for use in potentially explosive atmospheres created by the presence of flammable gases, vapours, mists or dusts.

Ex compliant standard gearboxes can be supplied against Groups 2 or 3 for surface industries in designated hazardous location Zones 1 and 2 for gases, vapours and mists; and in Zones 21 and 22 for dusts.

CONTENTS PAGE

GENERAL INFORMATION
REFERENCE NOTES

General Information

- Inch/Metric conversions may not be direct conversions.
- Our standards apply unless otherwise specified.
- All Dimensions are for reference only and are subject to change without notice unless certified.
- Unless otherwise specified, our coupling hubs will be bored for CLEARANCE FIT with a setscrew OVER the keyway or INTERFERENCE FIT without a setscrew.
- Torque ratings of couplings utilising Taper-Lock bushings can differ from those that do not. Refer to our Application Engineers for details.
- If we are to supply coupling hubs bored for Taper-Lock bushings, the bushing manufacturer MUST be noted on the order.
- Consult our Application Engineers when limited end float is required. -Refer to our Application Engineers for bore limitations on hubs requiring Puller Bolt holes.

Reference Notes

† Peak torque capacity is two times the published rating.
‡ Consult our Application Engineers for higher speeds.

• Maximum bores are reduced for hubs furnished with an INTERFERENCE FIT and a setscrew OVER the keyway. Recommended key sizes for the listed maximum bores are shown in each of the coupling type sections.

∆ Minimum bore is the smallest bore to which a RSB hub (rough stock bore) hub can be bored. Depending upon coupling size, rough stock bore hubs may have only a blind centering hole or a through hole that will permit re-machining of the hubs to the minimum bores specified.

♦ Sizes 5R - 50R Nylon cover furnished as standard and Epoxy coated steel cover available upon request. For Sizes 60R - 80R Epoxy coated steel cover is standard (Nylon cover not available).

◊ Cover fasteners are ISO 7380 Socket Button Head Capscrews. Two cover fasteners per coupling.

♠ To obtain total weight: Basic Coupling + BE times kg per mm of BE.

♣ To obtain total WR^2: Basic Coupling + BE times WR^2 per mm of BE.

♥ Values shown are based on no angular misalignment. The axial centering force restricts motor end float and satisfies the requirements of NEMA standards MG1 -14.37, 1-20.81 and 1-21.81.

§ Interpolate for intermediate speeds. Maximum BE is based on 70% of critical speed. Refer to our Application Engineers for higher running speeds.

Long Term Grease (LTG)

The high centrifugal forces encountered in couplings separate the base oil and thickener of general purpose greases. Heavy thickener, which has no lubrication qualities, accumulates in the tooth mesh area of gear couplings resulting in premature mesh failure unless periodic lubrication cycles are maintained. Long Term Grease (LTG) was developed specifically for couplings. It resists separation of the oil and thickener and is an extreme pressure grease. Although LTG grease is compatible with most other coupling greases, the mixing of greases may dilute the benefits of LTG.

Benefits include: increased coupling life, significantly extended re-lubrication intervals, reduced maintenance costs, reduced downtime, superior lubrication, high load carrying capabilities and it is usable up to 121°C (250°F).

SELECTION PROCEDURE

Standard Selection Method

The standard selection method can be used for most motor, turbine, or engine driven applications. The following information is required to select a gear coupling.

- Kilowatt (kW) or torque (Nm).
- Running rpm.
- Application or type of equipment to be connected (motor to pump, drive to conveyor, etc.).
- Shaft diameters.
- Shaft gaps.
- Physical space limitations.
- Special bore or finish information and type of fit.

Exceptions are High Peak Loads and Brake Applications. For these conditions, use the Formula Selection Method in the next column, or consult one of our Application Engineers for assistance.

1. RATING: Determine system torque. If torque is not given, calculate as shown below.

   System Torque (Nm) = $\frac{\text{kW x 9549}}{\text{rpm}}$

   Where: kW (Kilowatt) is the actual or transmitted power required by the application (if unknown, use the motor or turbine nameplate rating) and rpm is the actual speed the coupling is rotating. Applications that require rapid changes in direction or torque reversals should be referred to our Application Engineers.

1. SERVICE FACTOR: Determine the appropriate service factor from Table 1, Page 6.

2. REQUIRED MINIMUM COUPLING RATING: Determine the required minimum coupling rating as shown below Minimum Coupling Rating = S.F. (Service Factor) x Torque (Nm)

3. SIZE: Turn to appropriate pages for the coupling type chosen and trace down the torque column to a value that is equal or greater than that determined in Step 3 above. The coupling size is shown in the first column.

4. CHECK: Check speed (rpm), bore, gap and dimensions.

Formula Selection Method

The Standard Selection Method can be used for most coupling selections. The procedure below should be used for:

- High Peak Loads
- Brake Applications (where the disc brake or brakewheel is to be an integral part of the coupling, consult our Application Engineers for design options).

Providing system peak torque and frequency, duty cycle, and brake torque rating will allow for a more refined selection using the Formula Selection Method.

1. HIGH PEAK LOADS: Use one of the following formulas for applications using motors with torque characteristics that are higher than normal; applications with intermittent operations, shock loading, inertia effects due to starting and stopping and or system induced repetitive high peak torques. System Peak Torque is the maximum torque that can exist in the system.

   Select a coupling with a torque rating equal to or greater than selection torque calculated below.

A. NON-REVERSING HIGH PEAK TORQUE
   Selection Torque (Nm) = System Peak Torque
   or
   Selection Torque (Nm) = $\frac{\text{System Peak kW x 9549}}{\text{rpm}}$

B. REVERSING HIGH PEAK TORQUE
   Selection Torque (Nm) = 1.5 x System Peak Torque
   or
   Selection Torque (Nm) = $\frac{\text{1.5 x Peak kW x 9549}}{\text{rpm}}$

C. OCCASIONAL PEAK TORQUES (Non-Reversing)
   If a system peak torque occurs less than 1000 times during the expected coupling life, use the following formula:

   Selection Torque (Nm) = .5 x System Peak Torque
   or
   Selection Torque (Nm) = $\frac{\text{.5 x Peak kW x 9549}}{\text{rpm}}$

   For reversing service, select per Step B, above.

2. **BRAKE APPLICATIONS**: If the torque rating of the brake exceeds the motor torque, use the brake rating as follows:

   Selection Torque (Nm) = Brake Torque Rating x S.F.

SELECTION PROCEDURE

Table 1 - Coupling Service Factors for Motor ♦ and Turbine Drives

Alphabetical listing of applications

	Service Factor
AERATOR	2,0
AGITATORS	
Vertical and Horizontal Screw, Propeller, Paddle	1,0
BARGE HAUL PULLER	1,5
BLOWERS	
Centrifugal	1,0
Lobe or Vane	1,25
CAR DUMPERS	2,5
CAR PULLERS	1,5
CLARIFIER OR CLASSIFIER	1,0
COMPRESSORS	
Centrifugal	1,0
Lobe or Vane	1,25
Rotary, Screw	1,0
Reciprocating	
Direct Connected..	Refer to Application Engineer
Without Flywheel..	Refer to Application Engineer
With Flywheel and Gear between Compressor and Prime Mover ◊	
1 cylinder, single acting	3,0
1 cylinder, double acting	3,0
2 cylinder, single acting	3,0
2 cylinder, double acting	3,0
3 cylinder, single acting	3,0
3 cylinder, double acting	2,0
4 or more cyl., single acting	1,75
4 or more cyl., double acting	1,75
CONVEYORS ♠	
Apron, Assembly, Belt, Chain Flight, Screw	1,0
Bucket	1,25
Live Roll, Shaker and Reciprocating	3,0
CRANES AND HOIST♣♠	
Main Hoist	1,75♠
Skip Hoist	1,75♠
Slope	1,5
Bridge, Travel or Trolley	1,75
DYNAMOMETER	1,0
ELEVATORS	
Bucket, Centrifugal Discharge	1,25
Freight or Passenger	**Not Approved**
Gravity Discharge	1,25
ESCALATORS	**Not Approved**
EXCITER, GENERATOR	1,0
EXTRUDER, PLASTIC	1,0
FANS	
Centrifugal	1,0
Cooling Tower	2,0
Forced Draft - Across the Line star	1,5
Forced Draft Motor Driven thru fluid or electric slip clutch	1,0
Gas Recirculating	1,5
Induced Draft with damper control or blade cleaner	1,25
Induced Draft without controls	2,0
FEEDERS	
Apron, Belt, Disc, Screw	1,0
Reciprocating	2,5
GENERATORS	
Even Load	1,0
Hoist or Railway Service	1,5
Welder Load	2,0
FEEDERS	1,75
LAUNDRY WASHER OR TUMBLERS	2,0
LINE SHAFTS	
Any Processing Machinery	1,5
MACHINE TOOLS	
Auxiliary and Traverse Drive	1,0
Bending Roll, Notching Press, Punch Press, Planer, Plate Reversing	1,5
Main Drive	1,5
MAN LIFTS	**Not Approved**
METAL FORMING MACHINES	
Continuous Caster	1,75
Draw Bench Carriage and Main Drive	1,5
Extruder	2,0
Forming Machine and Forming Mills	2,0
Slitters	1,0
Wire Drawing of Flattening	1,75
Wire Winder	1,5
Coilers and Uncoilers	1,5
MIXERS (see Agitators)	
Concrete	1,75
Muller	1,5
PRESS, PRINTING	1,5
PUG MILL	1,5
PULVERISES	
Hammermill and Hog	1,75
Roller	1,5
PUMPS	
Boiler Feed	1,75
Centrifugal - Constant Speed	1,0
Frequent Speed Changes under Load	1,25
Descaling, with accumulators	1,25
Gear, Rotary, or Vane	1,25
Reciprocating, Plunger Piston	
1 cyl., single or double act	3,0
2 cyl., single acting	2,0
2 cyl., double acting	1,75
3 or more cylinders	1,5
Screw Pump, Progressing Cavity	1,25
Vacuum Pump	1,25
SCREENS	
Air Washing	1,0
Grizzly	2,0
Rotary Coal or Sand	1,5
Vibrating	2,5
Water	1,0
SKI TOWS & LIFTS	**Not Approved**
STEERING GEAR	1,0
STOKER	1,0
TIRE SHREDDER	1,50
TUMBLING BARREL	1,75
WINCH, MANOEUVRING	
Dredge, Marine	1,5
WINDLASS	1,5
WOODWORKING MACHINERY	1,0
WORK LIFT PLATFORMS	**Not Approved**

♦ For engine drives, refer to Table 2. Electric motors, generators, engines, compressors and other machines fitted with sleeve or straight roller bearings, usually require limited end float couplings. If in doubt, provide axial clearances and centering forces to one of our Application Engineers for a recommendation.

◊ For balanced opposed design, refer to our Application Engineers.

♠ If people are occasionally transported, refer to our Application Engineers for the selection of the proper size coupling.

♣ For high peak load applications (such as Metal Rolling Mills) refer to our Application Engineers.

Table 2♥ - Engine Drive Service Factors

Service Factors for engine drives are those required for applications where good flywheel regulation prevents torque fluctuations greater than ±20%. For drives where torque fluctuations are greater or where the operation is near a serious critical or torsional vibration, a mass elastic study is necessary.

No. of Cylinders	4 or 5 ♥					6 or more ♥				
Table 1 S.F.	1,0	1,25	1,5	1,75	2,0	1,0	1,25	1,5	1,75	2,0
Engine S.F.	2,0	2,25	2,5	2,75	3,0	1,5	1,75	2,0	2,25	2,5

♥ To use Table 2, first determine application service factor from Table 1. Use that factor to determine ENGINE Service Factor from table 2. When service factor from Table 1. is greater than 2.0 or where 1, 2 or 3 cylinder engines are involved, refer complete application details to our Application Engineers for engineering review.

Alphabetical listing of applications

	Service Factor
AGGREGATE PROCESSING, CEMENT, MINING KILNS; TUBE, ROD AND BALL MILLS	
Direct or on L.S. shaft of Reducer, with final drive	
Machined Spur Gears	2,0
Single Helical or Herringbone Gears	1,75
Conveyors, Feeders, Screens, Elevators	See General Listing
Crushers, Ore or Stone	2,5
Dryer, Rotary	1,75
Grizzly	2,0
Hammermill or Hog	1,75
Tumbling Mill or Barrel	1,75
BREWING AND DISTILLING	
Bottle and Can Filling Machines	1,0
Brew Kettle	1,0
Cookers, Continuous Duty	1,25
Lauter Tub	1,5
Mash tub	1,25
Scale Hopper, Frequent Peaks	1,75
CLAY WORKING INDUSTRY	
Brick Press, Briquette Machine, Clay Working Machine, Pug Mill	1,75
DREDGES	
Cable Reel	1,75
Conveyors	1,25
Cutter head, Jig Drive	2,0
Manoeuvring Winch	1,5
Pumps (uniform load)	1,5
Screen Drive, Stacker	1,75
Utility Winch	1,5
FOOD INDUSTRY	
Beet Slicer	1,75
Bottling, Can Filling Machine	1,0
Cereal Cooker	1,25
Dough Mixer, Meat Grinder	1,75
LUMBER	
Band Resaw	1,5
Circular Resaw, Cut-off	1,75
Edger, Head Rig, Hog	2,0
Gang Saw (Reciprocating)	Refer to Application Engineer
Log Haul	2,0
Planner	2,0
Planer	1,75
Rolls, Non-Reversing	1,25
Rolls, Reversing	2,0
Sawdust Conveyor	1,25
Slab Conveyor	1,75
Sorting Table	1,5
Trimmer	1,75
METAL ROLLING MILLS ♣	
Coilers)Up or Down) Cold Mills only	1,5
Coilers (Up or Down) Hot Mills only	2,0
Coke Plants	
Pusher Ram Drive	2,5
Door Opener	2,0
Pusher or Larry Car Traction Drive	3,0
Continuous Caster	1,75
Cold Mills -	
Strip Mills	Refer to Application Engineer
Temper Mills	Refer to Application Engineer
Cooling Beds	1,5
Drawbench	1,5
Feed Rolls - Blooming Mills	3,0
Furnace Pushers	2,0
Hot and Cold Saws	2,0
Hot Mills -	
Strip or Sheet Mills	Refer to Application Engineer
Reversing Blooming	Refer to Application Engineer
Slabbing Mills	Refer to Application Engineer
Edger Drivers	Refer to Application Engineer
Ingot Cars	2,0
Manipulators	3,0
Merchant Mills	Refer to Application Engineer
Mill Tables	
Roughing Breakdown Mills	3,0
Hot Bed or Transfer, non-reversing	1,5
Runout, reversing	3,0
Runout, non-reversing, non-plugging	2,0
Reel Drives	1,75
Rod Mills	Refer to Application Engineer
Screwdown	2,0
Seamless Tube Mills	
Piercer	3,0
Thrust Block	2,0
Tube Conveyor Rolls	2,0
Reeler	2.0
Kick Out	2,0
Shear, Croppers	Refer to Application Engineer
Sideguards	3,0
Skelp Mills	Refer to Application Engineer
Slitters, Steel Mills only	1,75
Soaking Pit Cover Drives -	
Lift	1,0
Travel	2,0
Straighteners	2,0
Unscramblers (Billet Bundle Busters)	2,0
Wire Drawing Machinery	1,75
OIL INDUSTRY	
Chiller	1,25
Oilwell Pumping (not over 150% peak torque)	2,0
Paraffin Filter Press	1,5
Rotary Kiln	2,0
PAPER MILLS	
Barker Auxiliary, Hydraulic	2,0
Barker, Mechanical	2,0
Barking Drum	
L.S. shaft or reducer with final drive - Helical or Herringbone Gear	2,0
Machined Spur Gear	2,5
Cast Tooth Spur Gear	3,0
Beater & Pulper	1,75
Bleachers, Coaters	1,0
Calender & Super Calender	1,75
Chipper	2,5
Converting Machine	1,25
Couch	1,75
Cutter, Felt Whipper	2,0
Cylinder	1,75
Dryer	1,75
Felt Stretcher	1,25
Fourdrinier	1,75
Jordan	2,0
Log Haul	2,0
Line Shaft	1,5
Press	1,75
Pulp Grinder	1,75
Reel, Rewinder, Winder	1,5
Stock Chest, Washer, Thickener	1,5
Stock Pumps, Centrifugal Constant Speed	1,0
Frequent Speed Changes Under Load	1,25
Suction Roll	1,75
Vacuum Pumps	1,25
RUBBER INDUSTRY	
Calender	2,0
Cracker, Plasticator	2,5
Extruder	1,75
Intensive or Banbury Mixer	2,5
Mixing Mill, Refiner or Sheeter	
One or two in line	2,5
Three or four in line	2,0
Five or more in line	1,75
Tire Building Machine	2,5
Tire & Tube Press Opener (Peak Torque)	1,0
Tuber, Strainer, Pelletizer	1,75
Warming Mill	
One or two Mills in line	2,0
Three or more Mills in line	1,75
Washer	2,5
SEWAGE DISPOSAL EQUIPMENT	
Bar Screen, Chemical Feeders, Collectors, Dewatering Screen, Grit Collector	1,0
SUGAR INDUSTRY	
Cane Carrier & Leveler	1,75
Cane Knife & Crusher	2,0
Mill Stands, Turbine Driver With all helical or Herringbone Gears	1,5
Electric Drive or Steam Engine Drive with Helical, Herringbone or Spur Gears with any Prime Mover	1,75
TEXTILE INDUSTRY	
Batcher	1,25
Calender, Card Machine	1,5
Cloth Finishing Machine	1,5
Dry Can, Loom	1,5
Dyeing Machinery	1,25
Knitting Machine	Refer to Application Engineer
Mangle, Napper, Soaper	1,25
Spinner, Tenter Frame, Winder	1,5

SELECTION PROCEDURE

SERVICE FACTORS: are a guide, based on experience of the ratio between coupling catalogue rating and system characteristics.

The system characteristics are best measured with a torque meter.

Table 3 . Service Factors

Torque Demands Driven Machine	Typical applications for electric motor or turbine driven equipment	Typical Service Factor
	Constant Torque such as Centrifugal Pumps, Blowers, and Compressors.	1
	Continuous duty with some torque variations including Extruders, Forced Draft Fans.	1.5
	Light shock loads from Briquetting Machine, Rubber Calender, or Crane and Hoist.	2
	Moderate shock loading as expected from a Car Dumper, Ball Mill, or Vibrating Screen.	2.5
	Heavy shock load with some negative torques from Crushers, Hammer Mill, and Barking Drum.	3
	Applications like Reciprocating Compressors with frequent torque reversals, which do not necessarily cause reverse rotations.	Consult Our Application Engineers

The following information is necessary to quote or ship to your characteristics. exact requirements. Prompt service is assured if this information is given on your inquiry or order.

1. Application: Driver & Driven

2. Power: Normal kW, Maximum kW or Torque (Nm)

3. Speed (RPM)
4. Quantity
5. Coupling Size and Type,
   e. g., Size 1070G20

6. Shaft Gap or distance between shaft ends (BE Dimension)
7. Bore Sizes: Must Specify clearance or interference fits. Bore tolerances will be furnished as per appropriate table for the coupling type unless specified differently
8. Shaft Dimensions as follows: (see diagram below) For Straight Shafts

For Straight Shafts

Driving Shaft	Diameter U _____ Length V _____ Keyway _____	Driven Shaft	Diameter U _____ Length V _____ Keyway _____

Note: Provide shaft tolerances if different than those shown. Unless otherwise specified, keyway sizes in inch shafts will be furnished based on key sizes listed, to our tolerances; metric keyways will be furnished per ISO/ R773-1969 and Js9 width tolerances. For other shaft/bore requirements consult our Application Engineers.

For Taper Shafts: Specify if keyway is to be parallel to the axis or to the bore.

Diameter U _____ Across Flats _____

Length V _____ Corners ZW _____

Length W _____ Taper per Foot _____

Length X _____ Keyway _____

Length Y _____

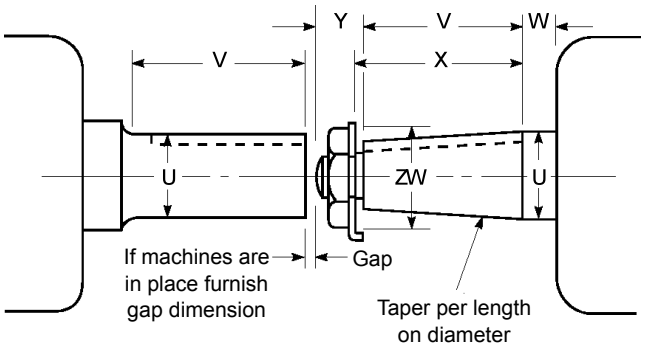

NOTES

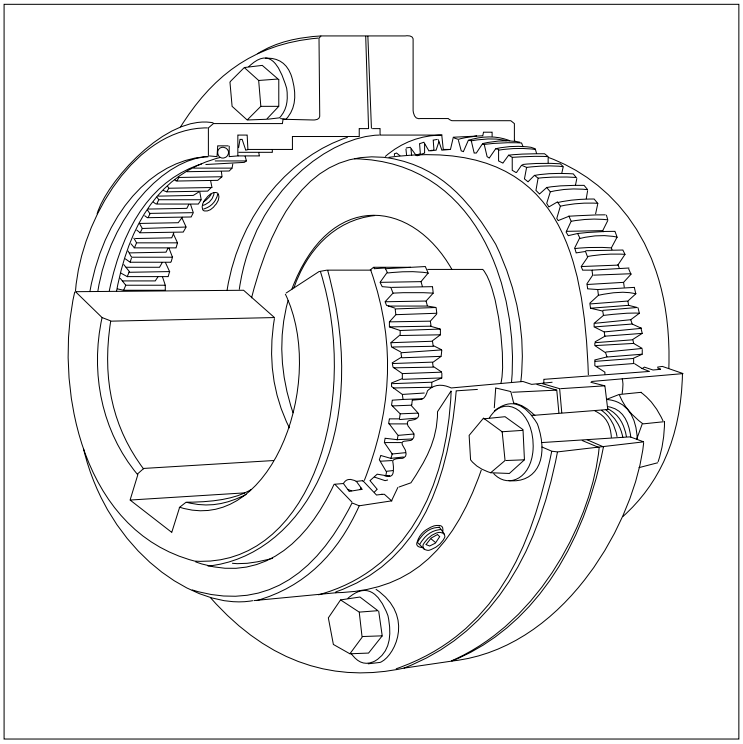

GEAR

Torsionally rigid, high torque couplings

SERIES X

GEAR COUPLINGS

Gear Couplings

A torsionally rigid, lubricated design that offers high torque capacity, application versatility, and where high torque loads exist or shaft diameters exceed 100 mm, the lowest initial cost. Available in 28 sizes, and all featuring triple-crowned teeth, our gear couplings offer the highest torque ratings (over 8 million Nm) and the largest bore capacities (up to 1025 mm) in the industry.

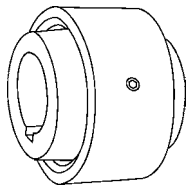	**Type GC02 & GC05 Continuous Sleeve Couplings** Features a one-piece, low profile sleeve encompassing the hubs. Economical and compact. Available in both close coupled and floating shaft models. (see pages 13 and 14)	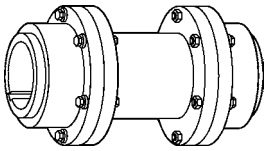	**Type G/GF32 Spacer Coupling** For pumps and compressor applications, provide ease of servicing connected equipment (see page 19)
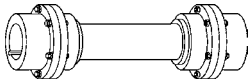	**Type G/GF52 Floating Shaft Coupling** Used when distance between equipment is too great for spacer couplings. 2 single engagement couplings with interconnecting shaft. Also available for vertical mounting. (see pages 16 and 17)	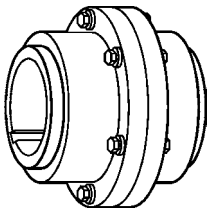	**Type G/GF20 Close Coupled Double Engagement Coupling** Design with 2 flex halves to accommodate both offset and angular misalignment. Also available for vertical mounting. (see page 15)

Special couplings - made to customers requirements (stainless steel etc) can be made upon request to our Application Engineers.
Contact our Application Engineers for information on these additional Gear Coupling designs.

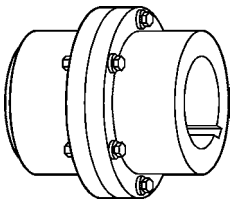	**Type G52 Single Engagement Coupling** Primarily used with floating shafts or 3 bearing drive trains. One (1) flex half and one (1) rigid half, only accepts angular misalignment.	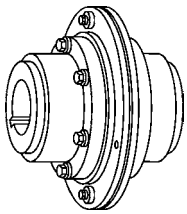	**Type GR Shear Pin Coupling** For applications subject to jamming. When pins break, equipment is physically disconnected, preventing damage.
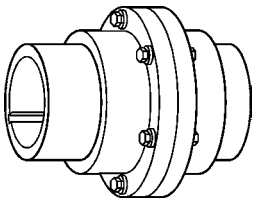	**Type GL Slide Coupling** Double and single engagement for applications requiring axial movement to accommodate thermal shaft expansion or adjustment.	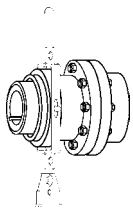	**Type G70 & G72 Disconnect Couplings** Used for applications that require quick disconnection of equipment or inching drives.
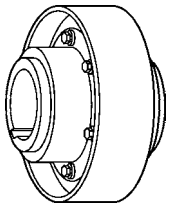	**Type G62/G63/G66 Brakewheel/Disc Brake Couplings** Double or single engagement for shoe brake applications, such as cranes, hoists and conveyers.	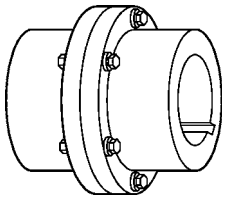	**Type G82/GV82 Rigid Couplings** Used when there is no need to accommodate misalignment and where thrust loads are generated such as vertical mixer applications.
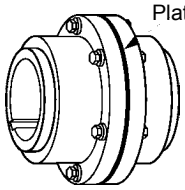	**Type GP Insulated Coupling** Double or single engagement and rigid insulated couplings are used to eliminate flow of stray current from one shaft to another. Insulator Plate	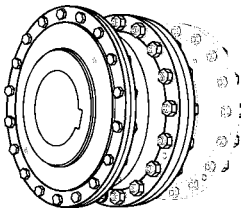	**Type G Large Gear Coupling** Available in all types for capacities up to 8,185,000 Nm (72,450,000 lb-in).

GENERAL DESCRIPTION

Gear Couplings

Low Initial Cost. Highest Bore Capacities & Ratings.

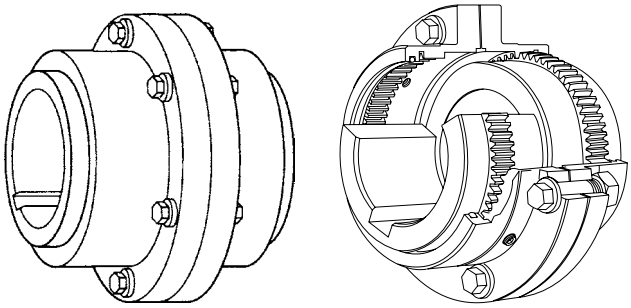

The wrong gear coupling can be costly. So we have developed the less expensive solution: Series X Type G couplings. The low initial cost of Gear Couplings, along with the highest bore capacities and ratings make them the true money saving option saving you as much as 35 percent over competitive designs.

Built to last longer, protect your equipment and save you money, our gear couplings are right for a whole world of applications.

What's more, our couplings are designed to AGMA size standards, and are interchangeable .half for half. with many other brands.

With a wide variety of sizes and capacity ratings, durable Gear couplings give users the broadest possible choice range, no matter what the application, or factory environment.

Smart Money
A large bore capacity and high ratings, combined with a gear couplings inherent torque density, offers a low initial cost. For many applications up to 35 percent over other brands.

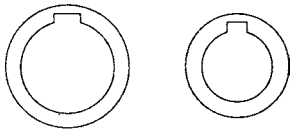

Longer Life
A longer working life is virtually built into couplings. Superior lubrication, grease, and a four point seal, extend life and reduce maintenance.

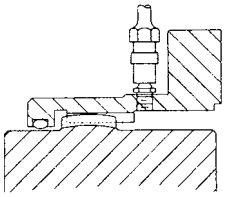

Equipment Protection
Triple crowned teeth are designed with crowns on all working portions of the teeth, so they can slide freely to accommodate misalignment and movement. As a result, connected equipment is protected from damaging loads.

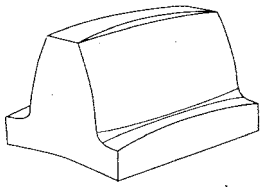

Interchangeability
Because of their standard sizes, our Gear couplings are one half for one half interchangeable with other standard gear couplings, regardless of difference in sleeve barrel, hub and bore dimensions.

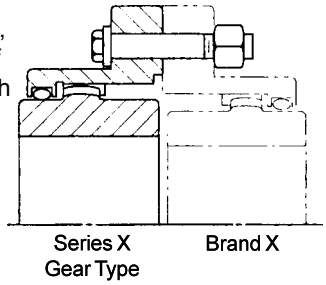

Gear Types Available

G Standard Flanged Sleeve
This general purpose series is used on bulk handling systems, paper machines, fans, pumps, cranes, mixers, sugar mills, crusher and many other high torque applications. Largest bore capacity and rating make this coupling an economical choice.

GC Continuous Sleeve
The one piece sleeve is used on high speed equipment with low inertia requirements, and in applications requiring a low initial cost.

GF .Steel Mill. Flanged Sleeve
This flanged sleeve series is specifically designed for Steel Mill requirements on applications such as reversing tables, feed rolls, reel drives, straighteners, drawing equipment and others.

• 205°C (400°F) high temperature seal rings can take the heat, without the high cost of metal seal designs.

G Large Flanged Sleeve
This larger capacity size is ideal for very high torque applications in power plants, mining, cement, steel and metal mills, paper, sugar, rubber and other large industrial plants. Lowest initial cost for high capacity requirements.
Our gear couplings are warranted for 3 years when lubricated with our Long Term Grease.

UNIT DESIGNATIONS

	Series	Size of Coupling				Type of Coupling				Driving Hub: Driving Hub Bore & Keyway	Driving Hub: Driving Hub Bore Diameter			Driven Hub: Driven Hub Bore & Keyway	Driven Hub: Driven Hub Bore Diameter		
	1	2	3	4	5	6	7	8	9	10	11	12	13	14	15	16	17
*	X																
Example	X	1	0	1	0	G	-	2	0	M	0	2	0	M	0	2	

1 - Series X

Range X

2, 3, 4, 5 - Size of Coupling

eg 1 0 1 0

6, 7, 8, 9 - Type of Coupling

Gear - Continuous Sleeve
Type
GC02 = Double Engagement
GC05 = Single Engagement/Floating Shaft

Gear - Standard Flanged Sleeve
Type (Shrouded and Exposed Bolts)
G-10 / 20 = Double Engagement (Shrouded /Exposed)
G-51 / 52 = Single Engagement / Floating Shaft (Shrouded /Exposed)
GV10 / 20 = Vertical Double Engagement (Shrouded / Exposed)
GV51 / 52 = Vert. Single Engage. / Floating Shaft (Shrouded /Exposed)
G-62 = Brakewheel Double Engagement (Exposed)
G-63 = Disc Brake Double Engagement (Exposed)
G-66 = Brakewheel Single Engagement (Exposed)
GL20 = Slide Double Engagement (Exposed)
GL52 = Slide Single Engagement / Floating Shaft (Exposed)
G-70 = Disconnect / Inching Drives
G-72 = Disconnect (Exposed)
G-31 / 32 = Spacer (Shrouded/Exposed)
GP20 = Insulated Double Engagement (Exposed)
GP52 = Insulated Single Engagement / Floating Shaft (Exposed)
GP82 = Insulated Rigid (Exposed)
G-81 / 82 = Rigid (Shrouded / Exposed)
GV82 = Vertical Rigid (Exposed)
GR20 = Shear Pin (Exposed)

Gear - Steel Mill Flanged Sleeve
Type (Shrouded and Exposed Bolts)
GF10 / 20 = Double Engagement (Shrouded / Exposed)
GF31 / 32 = Spacer (Shrouded / Exposed)
GF51 / 52 = Single Engagement / Floating Shaft (Shrouded / Exposed)

Gear - Large Flanged Sleeve
Type (Exposed Bolts Only)
G-20 = Double Engagement -Pilot Bore
G-52 = Single Engagement / Floating Shaft
GV20 = Vertical Double Engagement
GV52 = Vertical Single Engagement / Floating Shaft
GL20 = Slide Double Engagement
G-70 = Disconnect / Inching Drives
G-32 = Spacer
G-82 = Rigid
GV82 = Vertical Rigid
GR20 = Shear Pin

15, 16, 17 - Driving Hub Bore Diameter
(Gear half for single engagement couplings)

eg 0 2 0

14 - Driving Hub Bore and Keyway
(Gear half for single engagement couplings)

- M - Metric Bore Parallel Keyway
- T - Metric Bore Taper Keyway
- I - Inch Bore Parallel Keyway
- B - Inch Bore Taper Keyway
- P - Pilot Bore
- C - Customer Specified Metric
- S - Customer Specified Inch
- A - American Square Key
- H - Half Coupling

11, 12, 13 - Driving Hub Bore Diameter
(Rigid half for single engagement couplings)

eg 0 2 0

10 - Driving Hub Bore and Keyway
(Rigid half for single engagement couplings)

- M - Metric Bore Parallel Keyway
- T - Metric Bore Taper Keyway
- I - Inch Bore Parallel Keyway
- B - Inch Bore Taper Keyway
- P - Pilot Bore
- C - Customer Specified Metric
- S - Customer Specified Inch
- A - American Square Key
- H - Half Coupling

* This Page May Be Photocopied Allowing The Customer To Enter Their Order

Type GC02 Continuous Sleeve
Double Engagement Close-Coupled / Dimensions - Millimeters

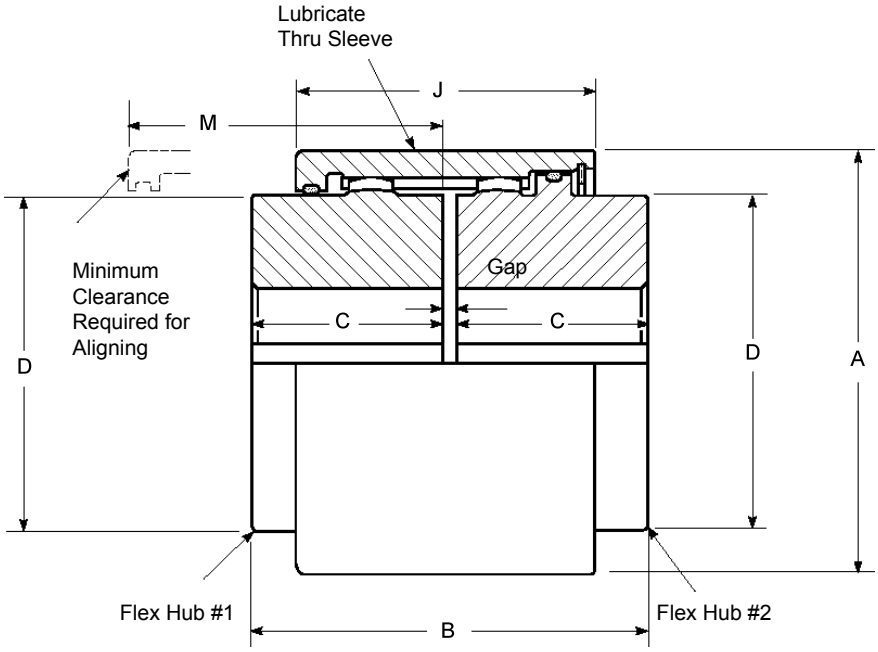

SIZE *	Torque Rating (Nm)†	Allow Speed (rpm)‡	Max Bore		Cpig Wt With No Bore (kg)	Lube	DIMENSIONS - Millimeters						
			(mm)•	(Inch)•			A	B	C	D	J	M	Gap
1010GC	1140	5300	50	1.875	3,54	0,0113	88,9	88,8	42,9	68,6	62,9	65	3
1015GC	2350	4300	65	2.375	6,17	0,0283	109,2	101,6	49,3	86,4	76,2	81	3
1020GC	4270	3700	78	2.878	11,4	0,0425	132,1	127,0	62,0	105,2	94,5	99	3
1025GC	7470	3300	98	3.625	21,5	0,0652	163,6	159,0	77,0	130,6	109,1	116	5
1030GC	12100	2900	111	4,125	34,1	0,0936	190,5	187,4	91,2	152,4	119,9	126	5

* Refer to Page 4 for General Information and Reference Notes.

Type GC02 Continuous Sleeve
Floating Shaft Single Engagement / Dimensions - Millimeters

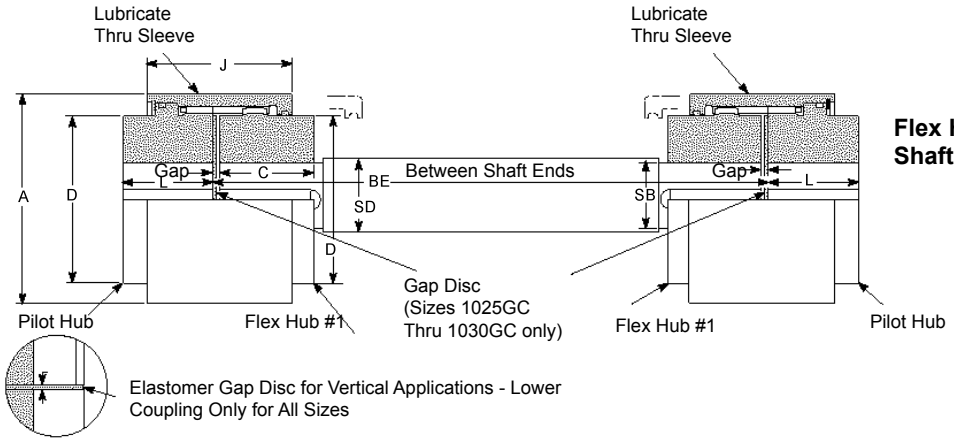

Flex Hubs on Floating Shaft (PFFP)

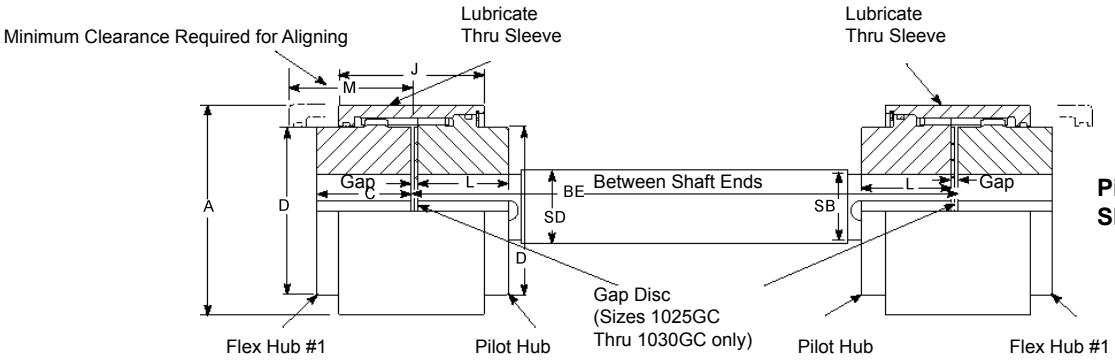

Pilot Hubs on Floating Shaft (FPPF)

Size *	Assembly Torque Rating (Nm) †	Max B		Wt - One Cpig No Bore (kg)	Lube Wt (kg)	DIMENSIONS - Millimeters								
						A	BE Min		C	D	J	L	M	Gap
		(mm) •	(Inch) •				PF-FP	FP-PF						
1010GC	1140	50	1.875	3,49	0,00850	88,9	190	92,2	42,9	68,6	61,2	42,9	65	3
1015GC	2350	65	2.375	6,40	0,0198	109,2	235	104,9	49,3	86,4	76,2	51,1	81	3
1020GC	4270	78	2.875	11,7	0,0312	132,1	290	130,3	62,0	105,2	94,5	63,8	99	3
1025GC	7470	98	3.625	21,8	0,0522	163,6	338	163,6	77,0	130,6	109,1	77,0	116	5
1030GC	12100	111	4.125	34,6	0,0730	190,5	368	192,0	91,2	152,4	119,9	91,2	126	5

Size *	Assembly Torque Rating ** (Nm) †	SB Shaft End Diameter (mm)	SD Shaft Diameter (mm)	Weight (kg per mm)	WR^2 (kgM^2 per mm)	Maximum (mm) for Various RPM's §						
						1750	1430	1170	870	720	580	540 or less
1010GC	439	38,1	39,7	0,00964	0,00000196	1371	1524	1676	1955	2159	2387	2463
	1140	47,6	50,8	0,0159	0,00000518	1549	1727	1905	2209	2438	2717	2794
1015GC	1170	50,8	54,0	0,0179	0,00000657	1600	1778	1955	2286	2514	2794	2870
	2350	60,3	63,5	0,0248	0,0000126	1752	1930	2133	2463	2717	3022	3124
1020GC	2280	63,5	66,7	0,0273	0,0000152	1778	1981	2184	2540	2794	3098	3200
	4270	73,0	76,2	0,0357	0,0000259	1905	2108	2336	2717	2971	3327	3429
1025GC	4460	79,4	82,6	0,0420	0,0000357	1981	2209	2438	2819	3098	3454	3556
	7470	92,1	95,2	0,0559	0,0000634	2133	2362	2616	3022	3327	3708	3835
1030GC	8500	98,4	101,6	0,0636	0,0000820	2209	2438	2692	3124	3454	3835	3962
	12100	104,8	108,0	0,0718	0,000104	2260	2514	2794	3225	3556	3962	4064

* Refer to Page 4 for General Information and Reference Notes.
** Limited by coupling size, shaft end diameter or both. Refer to Page 5 - 7 for section procedure

Type G20 Standard Flanged Sleeve
Double Engagement Close-Coupled / Dimensions - Millimeters

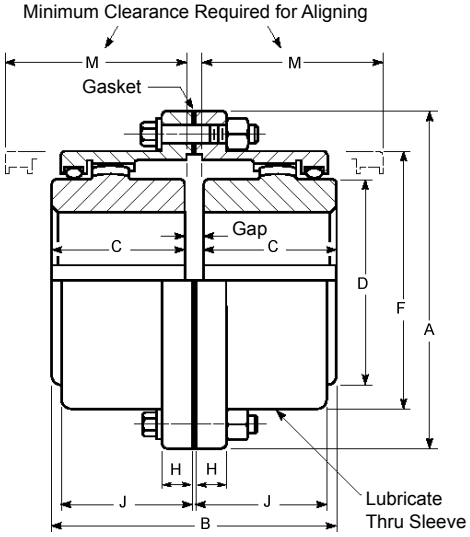

Type G20 Exposed Bolts

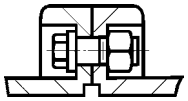

For Sizes 1010G thru 1055G,Type G10 Shrouded Bolts furnished only when specified on order

Size *	Torque Rating ** (Nm) †	Allow Speed (rpm)‡	Max Bore		Cpig Wt With No Bore - kg		Lube Wt (kg)	DIMENSIONS - Millimeters								
			(mm)•	(Inch)•	G10	G20		A	B	C	D	F	H	J	M	Gap
1010G	1140	8000	50	1.875	4,08	4,54	0,0408	115,9	88,9	42,9	68,6	83,8	14,0	38,9	51	3
1015G	2350	6500	65	2.375	7,71	9,07	0,0726	152,4	101,6	49,3	86,4	105,2	19,0	47,8	61	3
1020G	4270	5600	78	2.875	13,6	15,9	0,113	177,8	127,0	62,0	105,2	126,5	19,0	59,4	77	3
1025G	7470	5000	98	3.625	24,9	29,5	0,213	212,7	158,9	77,0	130,6	154,9	21,8	71,6	92	5
1030G	12100	4400	111	4.125	38,6	43,1	0,363	239,7	187,4	91,2	152,4	180,3	21,8	83,8	107	5
1035G	18500	3900	134	4.875	61,2	68,0	0,544	279,4	218,9	106,4	177,8	211,3	28,4	97,5	130	6
1040G	30600	3600	160	5.750	88,5	97,5	0,907	317,5	247,3	120,6	209,6	245,4	28,4	111,3	145	6
1045G	42000	3200	183	6.750	127	136	1,04	346,1	277,7	134,9	235,0	274,1	28,4	122,9	166	8
1050G	56600	2900	200	7.375	177	191	1,77	388,9	314,3	153,2	254,0	305,8	38,1	140,7	183	8
1055G	74000	2650	220	8.250	238	249	2,22	425,4	344,3	168,1	279,4	334,3	38,1	158,0	204	8
1060G	90400	2450	244	9.125	…	306	3,18	457,2	384,4	188,2	304,8	366,0	25,4	169,2	229	8
1070G	135000	2150	289	10.875	…	485	4,35	527,0	451,5	220,7	355,6	424,9	28,4	195,6	267	10

Limited End Float & Standard Gap Disc Dimensions - Millimeters

* Refer to Page 4 for General Information and Reference Notes.

SIZE	DIMENSIONS - Millimeters				
	B	End Float **	Gap Disc		Gap
			Thickness	Dia	
1010G	90,9	2,39	4	75	5
1015G	103,6	2,39	4	94	5
1020G	129,8	2,39	5	114	6
1025G	162,3	2,39	7	141	8
1030G	191,5	2,39	8	165	9
1035G	223,3	4,78	8	192	10
1040G	251,7	4,78	8	227	10
1045G	283,2	4,78	11	253	13
1050G	319,8	4,78	11	278	13
1055G	350,5	4,78	12	305	14
1060G	392,4	4,78	14	333	16
1070G	459,7	4,78	16	384	18

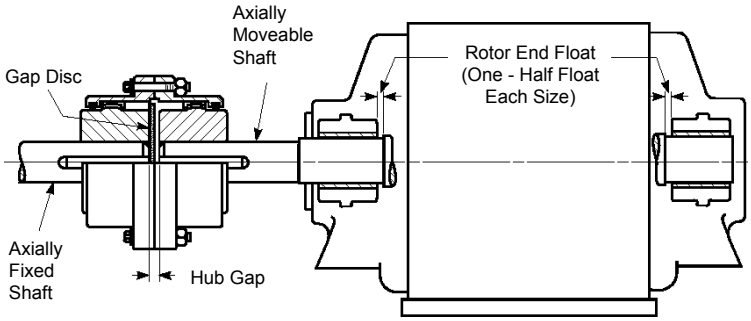

** If these values exceed one-half rotor end float or equivalent manufacturer's specification, refer to our Application Engineers.
◊ Gap disc material: Neoprene, 70 durometer

Type G52 Standard Flanged Sleeve
Single Engagement / Dimensions - Millimeters

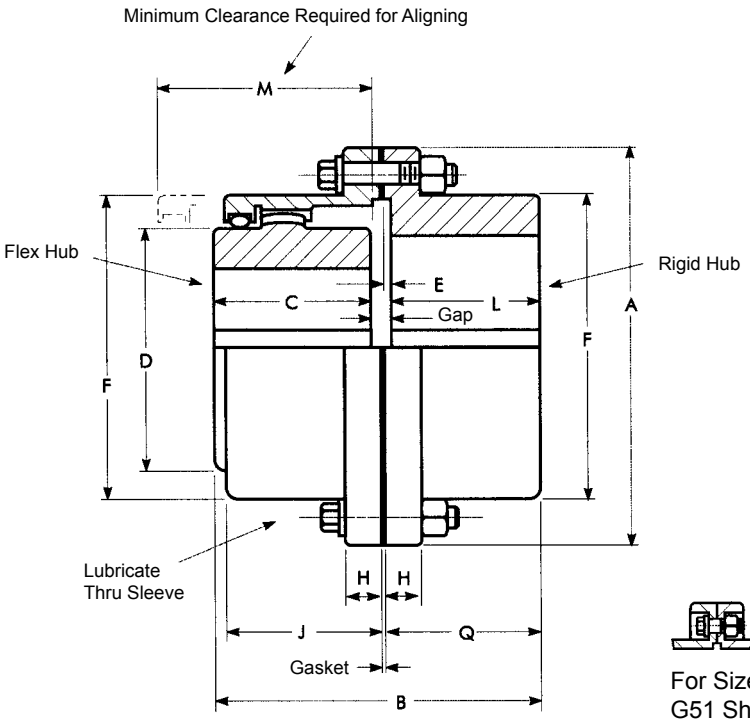

For Sizes 1010G thru 1055G, Type G51 Shrouded Bolts furnished only when specified on order

Size *	Torque Rating ** (Nm) †	Allow Speed (rpm)‡	Max Bore		Min Bore (mm)	Cpig Wt With No Bore - kg		Lube Wt (kg)	DIMENSIONS - Millimeters											
			Flex Hub	Rigid Hub		G51	G52		A	B	C	D	E	F	H	J	L	M	Q	Gap
1010G	1139	8000	50	65	12,7	4,08	4,54	0,0227	115,9	86,6	42,9	68,6	2,5	83,8	14,0	38,9	39,6	51	42,2	4
1015G	2350	6500	65	80	19,0	8,16	9,07	0,0408	152,4	99,6	49,3	86,4	2,5	105,2	19,0	47,8	46,2	61	48,8	4
1020G	4270	5600	78	98	25,4	13,6	15,9	0,0680	177,8	124,5	62,0	105,2	2,5	126,5	19,0	59,4	58,4	76	61,0	4
1025G	7470	5000	98	118	31,8	24,9	27,2	0,118	212,9	155,4	77,0	130,6	2,5	154,9	21,8	71,6	73,7	91	76,2	5
1030G	12100	4400	111	140	38,1	38,6	43,1	0,181	239,8	183,9	91,2	152,4	2,5	180,3	21,8	83,8	87,9	107	90,4	5
1035G	18500	3900	134	163	50,8	61,2	68,0	0,272	279,4	214,1	106,4	177,8	2,5	211,3	28,4	97,5	102,1	130	104,6	6
1040G	30600	3600	160	196	63,5	90,7	99,8	0,467	317,5	242,8	120,6	209,6	4,1	245,4	28,4	111,3	115,3	145	119,4	7
1045G	42000	3200	183	216	76,2	129,3	136	0,557	346,0	273,1	134,9	235,0	4,1	274,1	28,4	122,9	130,6	165	134,6	8
1050G	56600	2900	200	235	88,9	181,4	195	0,907	388,9	309,1	153,2	254,0	5,1	305,8	38,1	140,7	147,3	183	152,4	9
1055G	74000	2650	220	266	101,6	251,7	263	1,13	425,4	349,5	168,1	279,4	5,1	334,3	38,1	158,0	172,7	203	177,8	9
1060G	90400	2450	244	290	114,3	…	324	1,70	457,2	385,1	188,2	304,8	6,6	366,0	25,4	169,2	186,4	229	193,0	10
1070G	135000	2150	289	340	127,0	…	508	2,27	527,0	453,6	220,7	355,6	8,4	424,9	28,4	195,6	220,2	267	228,6	13

* Refer to Page 4 for General Information and Reference Notes.

Type G52 Standard Flanged Sleeve Floating Shafts / Dimensions - Millimeters

A standard floating shaft assembly consists of two standard single engagement couplings, two gap discs and a connecting shaft.

A floating shaft can eliminate the need for additional bearing supports along spanning shaft because the shaft is supported at the ends by connected equipment through the single engagement couplings.

Flex Hubs on Floating Shaft (RFFR)

Assembly of the flex hubs on the floating shaft allows for easier replacement in case of wear and allows the rigid hubs with their increased bore capacity to be used on the connected equipment shafts. This frequently means a smaller coupling size can be utilised.

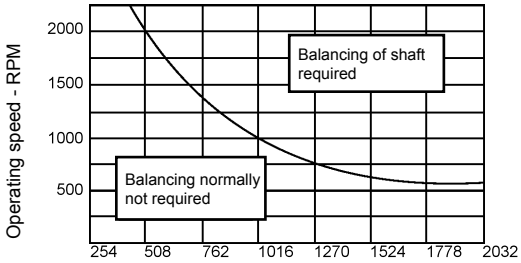

Rigid Hubs on Floating Shaft (FRRF)

When the rigid hubs are on the floating shaft, shorter shaft spans can be accommodated, since no cover drawback is required. Since the flex hubs are outboard, the points of articulation are further apart, providing greater offset misalignment capacity.

Solid Floating Shaft Selection

Single Engagement Type G52/GV52 couplings are used with floating shafts in either horizontal or vertical applications. For vertical applications select a Type GV52 coupling for the lower coupling assembly. Select floating shafts as follows:

1. Use the Standard or Formula Selection Methods, Page 5 to select the couplings. Record the **Required Minimum Coupling Rating** from standard selection method or **Selection Torque** from formula selection method.
2. From table below select a shaft diameter that has an assembly torque rating equal to or greater than the system or selection torque determined in coupling selection.
3. Check maximum 'BE' for the shaft diameter selected and running speed for shaft length required from table below. Refer to graph at left to determine if shaft requires balancing.
4. If the application shaft length exceeds the maximum "BE" listed, select the next larger shaft diameter or the next larger size coupling. Consult the Factory for higher speeds or longer shaft lengths than listed below.

NOTE: For conditions that require a larger size coupling, consider a Tubular Shaft Design, refer complete application details to our Application Engineers

Size *	Assembly Torque Rating ** (Nm) †	Floating Shaft										
		SB Shaft End Diameter (mm)	SD Shaft Diameter (mm)	Weight (kg per mm)	WR^2 (kgM^2 per mm)	Maximum BE (mm) for Various RPM's §						
						1750	1430	1170	870	720	580	540 or less
1010G	493	38,1	39,7	0,00964	0,00000196	1371	1524	1676	1955	2159	2387	2463
	1140	47,6	50,8	0,0159	0,00000518	1549	1727	1905	2209	2438	2717	2794
1015G	1170	50,8	54,0	0,0179	0,00000657	1600	1778	1955	2286	2514	2794	2870
	2350	60,3	63,5	0,0248	0,0000126	1752	1930	2133	2463	2717	3022	3124
1020G	2280	63,5	66,7	0,0273	0,0000152	1778	1981	2184	2540	2794	3098	3200
	4270	73,0	76,2	00,557	0,0000259	1905	2108	2336	2717	2971	3327	3429
1025G	4460	79,4	82,6	0,0420	0,0000357	1981	2209	2438	2819	3098	3454	3556
	7470	92,1	95,2	0,0559	0,0000634	2133	2362	2616	3022	3237	3708	3835
1030G	8500	98,4	101,6	0,0636	0,0000820	2209	2438	2692	3124	3454	3835	3962
	12100	104,8	108,0	0,0718	0,000104	2260	2514	2794	3225	3556	3962	4064
1035G	13300	114,3	120,6	0,0896	0,000163	2413	2667	2946	3403	3759	4191	4292
	18500	123,8	127,0	0,0993	0,000200	2463	2717	3022	3505	3860	4292	4419
1040G	24300	139,7	146,0	0,131	0,000350	2641	2921	3251	3759	4140	4597	4749
	30600	146,0	152,4	0,143	0,000415	2692	2997	3302	3835	4216	4699	4851
1045G	31600	152,4	165,1	0,168	0,000572	2819	3124	3454	3987	4394	4902	5029
	42000	171,5	203,2	0,254	0,00131	3124	3454	3810	4445	4876	5435	5588
1050G	37900	161,9	165,1	0,168	0,000572	2819	3124	3454	3987	4394	4902	5029
	56600	187,3	203,2	0,254	0,00131	3124	3454	3810	4445	4876	5435	5588
1055G	37900	161,9	165,1	0,168	0,000572	2819	3124	3454	3987	4394	4902	5029
	74000	200,0	203,2	0,254	0,00131	3124	3454	3810	4445	4876	5435	5588
1060G	71400	200,0	203,2	0,254	0,00131	3124	3454	3810	4445	4876	5435	5588
	90400	215,9	217,4	0,291	0,00172	3225	3581	3962	4597	5054	5613	5791
1070G	71400	200,0	203,2	0,254	0,00131	3124	3454	3810	4445	4876	5435	5588
	135000	241,3	242,8	0,363	0,00268	3403	3784	4191	4851	5334	5943	6121

* Refer to Page 4 for General Information and Reference Notes.
** Assembly torque rating is limited by coupling size, shaft end diameter or both.

Type G52 Standard Flanged Sleeve
Single Engagement / Dimensions - Millimeters

Flex Hubs on Floating Shaft (RFFR)

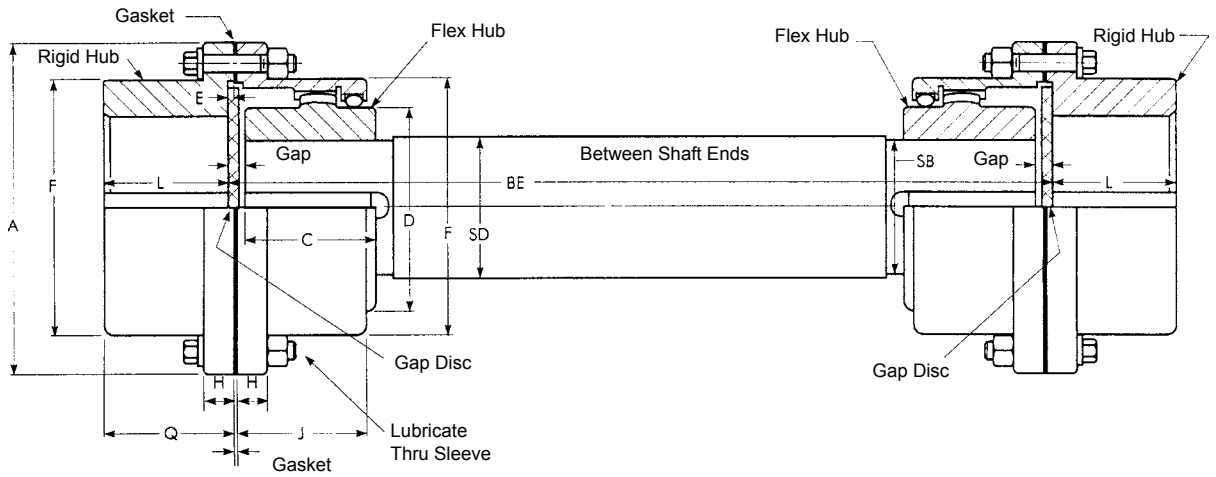

Rigid Hubs on Floating Shaft (FRRF)

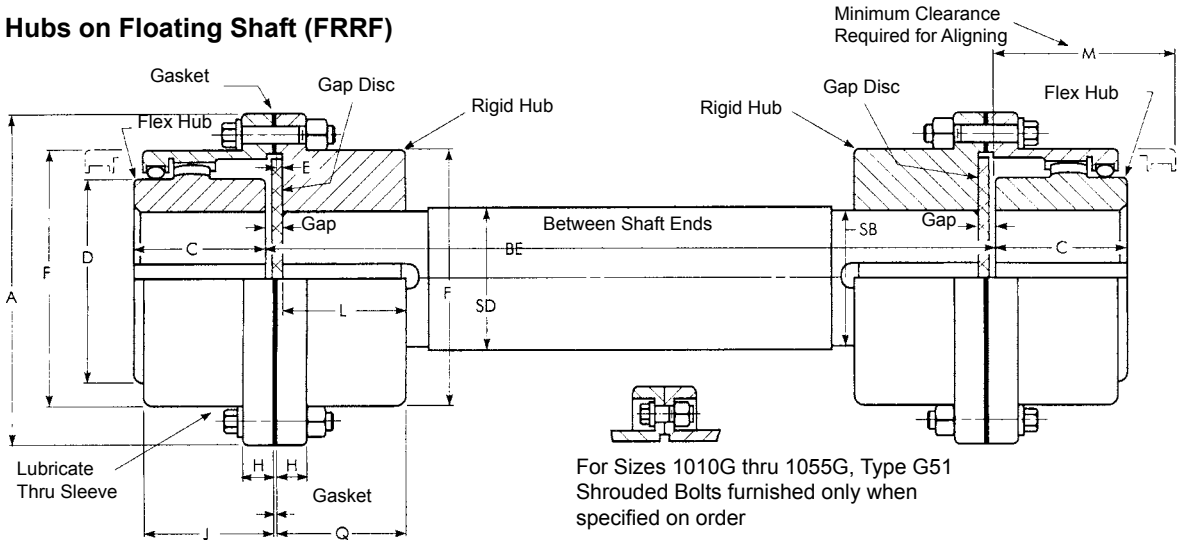

For Sizes 1010G thru 1055G, Type G51 Shrouded Bolts furnished only when specified on order

Size *	Max Bore (mm)		Max Bore (inch)		Wt -One Cpig No Bore - kg		Lube Wt Per Cpig (kg)	DIMENSIONS - Millimeters												
	Flex Hub	Rigid Hub	Flex Hub	Rigid Hub	G51	G52		A	BE Min RFFR	BE Min FRRF	C	D	E	F	H	J	L	M	Q	Gap
1010G	50	65	1.875	2.375	4,08	4,54	0,0227	115,9	133	92	42,9	68,6	2,5	83,8	14,0	38,9	39,6	48	42,2	4
1015G	65	80	2.375	2.938	8,16	9,07	0,0408	152,4	159	105	49,3	86,4	2,5	105,2	19,0	47,8	46,2	56	48,8	4
1020G	78	98	2.875	3.625	13,6	15,9	0,0680	177,8	197	129	62,0	105,2	2,5	126,5	19,0	59,4	58,4	69	61,0	4
1025G	98	118	3.625	4.375	24,9	27,2	0,118	212,7	241	162	77,0	130,6	2,5	154,9	21,8	71,6	73,7	81	76,2	5
1030G	111	140	4.125	5.125	38,6	43,1	0,181	239,7	279	189	91,2	152,4	2,5	108,3	21,8	83,8	87,9	94	90,4	5
1035G	134	163	4.875	5.875	61,2	68,0	0,272	279,4	324	219	106,4	177,8	2,5	211,3	28,4	97,5	102,1	107	104,6	6
1040G	160	196	5.750	7.250	90,7	99,8	0,467	317,5	419	248	120,6	209,8	3,8	245,4	28,4	111,3	115,6	122	119,4	7
1045G	183	216	6.750	8.125	129,3	136,1	0,557	346,1	508	281	134,9	235,0	3,8	274,1	28,4	122,9	130,8	135	134,6	8
1050G	200	235	7.375	9.000	181,4	195,0	0,907	388,9	533	316	153,2	254,0	5,1	305,8	38,1	140,7	147,3	152	152,4	9
1055G	220	266	8.250	10.000	251,7	263,1	1,13	425,4	572	367	168,1	279,4	5,1	334,3	38,1	158,0	172,7	173	177,8	9
1060G	244	290	9.125	11.000	…	324,3	1,70	457,2	597	397	188,2	304,8	6,6	366,0	25,4	169,2	186,4	183	193,0	10
1070G	289	340	10.875	13.000	…	508,0	2,27	527,0	673	470	220,7	355,6	8,4	424,9	28,4	195,6	220,2	208	228,6	13

* Refer to Page 4 for General Information and Reference Notes.

Type G52 Standard Flanged Sleeve
Single Engagement / Dimensions - Millimeters

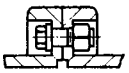

Type G31 shrouded Bolts furnished only when specified on order

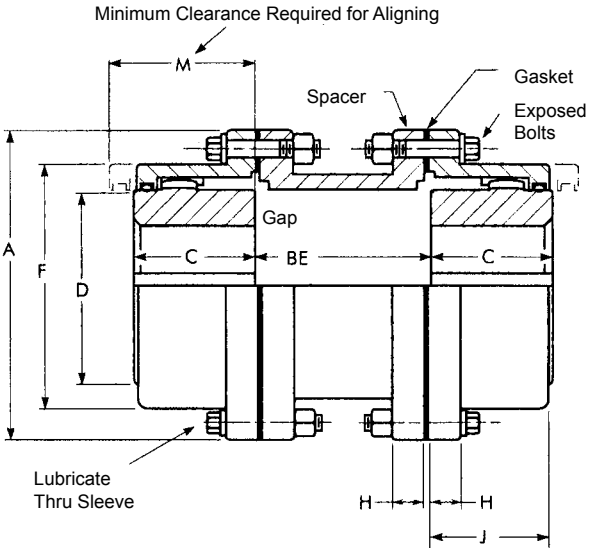

Size *	Torque Rating ** (Nm) †	Allow Speed (rpm)‡	Max Bore		Cpig Wt - kg		Lube Wt - kg		DIMENSIONS - Millimeters									
			(mm)•	(Inch)•	Cpig Wt With No Bore and Min BE	Extra Spacer Wt per mm of Length	Min Wt Less Spacer	Plus per mm of Spacer Length	A	BE Min G31	BE Min G32	BE Max G31& G32	C	D	F	H	J	M
1010G	1140	7000	50	1.875	6,80	0,0120	0,0408	…	115,9	82	82	311	42,9	68,6	83,8	14,0	38,9	48
1015G	2350	5500	65	2.375	13,6	0,0127	0,0726	…	152,4	82	82	311	49,3	86,4	105,2	19,0	47,8	56
1020G	4270	4600	78	2.875	20,4	0,0166	0,113	0,000536	177,8	82	82	311	62,0	105,2	126,5	19,0	59,4	69
1025G	7470	4000	98	3.625	38,6	0,0205	0,227	0,00107	212,9	108	95	311	77,0	130,6	154,9	21,8	71,6	81
1030G	12100	3600	111	4.125	54,4	0,0236	0,363	0,00107	239,8	108	95	311	91,2	152,4	180,3	21,8	83,8	94
1035G	18500	3100	134	4.875	88,5	0,0359	0,544	0,00214	279,4	130	120	311	106,4	177,8	211,3	28,4	97,5	107
1040G	30600	2800	160	5.750	122,5	0,0500	0,907	0,00357	317,5	130	120	311	120,6	209,6	245,4	28,4	111,3	122
1045G	42000	2600	183	6.750	166	0,0736	1,04	0,00357	346,1	133	120	311	134,9	235,0	274,1	28,4	122,9	135
1050G	56600	2400	200	7.375	238	0,0814	1,77	0,00357	388,9	184	146	311	153,2	254,0	305,8	38,1	140,7	152
1055G	74000	2200	220	8.250	306	0,0895	2,22	0,00357	425,4	184	146	311	168,1	279,4	334,3	38,1	158,0	173
1060G	90400	2100	244	9.125	358	0,117	3,18	0,00357	457,2	…	146	311	188,2	304,8	366,0	25,4	169,2	183
1070G	135000	1800	289	10.875	562	0,141	4,35	0,00357	527,0	…	146	311	220,7	355,6	424,9	28,4	195,6	208

* Refer to Page 4 for General Information and Reference Notes.

Table 4 - Type G32 Standard Stock Spacer Lengths

Distance Between Shaft Ends		Pump Std	Coupling Size					
mm	Inches		1010	1015	1020	1025	1030	1035
89	3.500	ANSI	•	•				
111	4.375	ANSI	•		•			
114	4.500	MISC						• **
127	5.000	ANSI	•	•	•	•	•	
178	7.000	ANSI			•	•	•	

** Bolt holes staggered for assembly clearance.

Type G82 Standard Flanged Sleeve Rigid / Dimensions - Millimeters

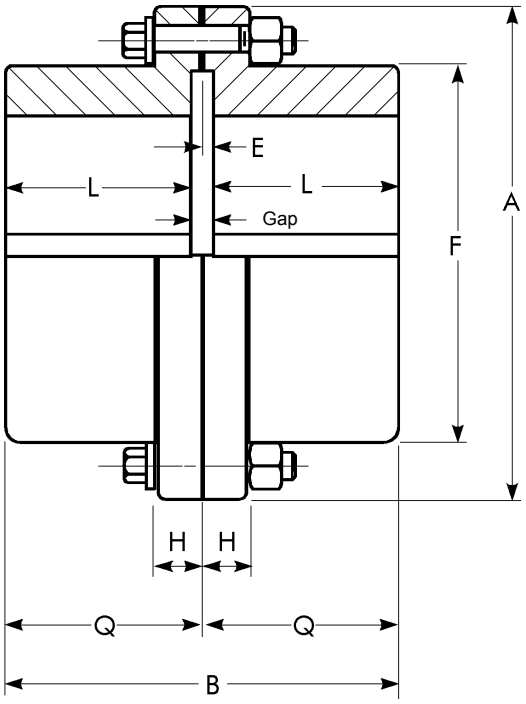

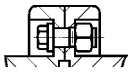

Type G81 Shrouded Bolts furnished only when specified on order. Sizes 1060G and 1070G available only as Type G82.

Size *	Torque Rating (Nm) †	Allow Speed (rpm)‡	Max Bore (mm)	Min Bore (mm)	Cpig Wt With No Bore - kg		DIMENSIONS - Millimeters								
					G81	G82	A	B	E	F	H	L	Q	Gap	SIZE *
1010G	1139	8,000	65	12,7	4,08	4,54	115,9	84,3	2,5	83,8	14,0	39,6	42,2	5	1010G
1015G	2350	6,500	80	19,0	8,62	9,07	152,4	97,5	2,5	105,2	19,0	46,2	48,8	5	1015G
1020G	4270	5,600	98	25,4	13,6	15,9	177,8	121,9	2,5	126,5	19,0	58,4	61,0	5	1020G
1025G	7470	5,000	118	31,8	24,9	27,2	212,9	152,4	2,5	154,9	21,8	73,7	76,2	5	1025G
1030G	12100	4,400	140	38,1	40,8	43,1	239,8	180,8	2,5	180,3	21,8	87,9	90,4	5	1030G
1035G	18500	3,900	163	50,8	61,2	70,3	279,4	209,3	2,5	211,3	28,4	102,1	104,6	5	1035G
1040G	30600	3,600	196	63,5	95,3	102	317,5	238,8	4,1	245,4	28,4	115,3	119,4	8	1040G
1045G	42000	3,200	216	76,2	132	141	346,0	269,2	4,1	274,1	28,4	130,6	134,6	8	1045G
1050G	56600	2,900	235	88,9	188	204	388,9	304,8	5,1	305,8	38,1	147,3	152,4	10	1050G
1055G	74000	2,650	266	101,6	268	281	425,4	355,6	5,1	334,3	38,1	172,7	177,8	10	1055G
1060G	90400	2,450	290	114,3	…	336	457,2	386,1	6,6	366,0	25,4	186,4	193,0	13	1060G
1070G	135000	2,150	340	127,0	…	535	527,0	457,2	8,4	424,9	28,4	220,2	228,6	17	1070G

Type G Standard Flanged Sleeve
Mill Motor & Taper Bores / Metric Equivalent Dimensions - Millimeters

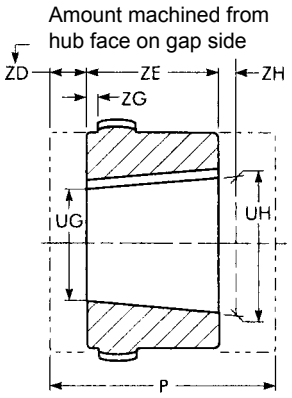

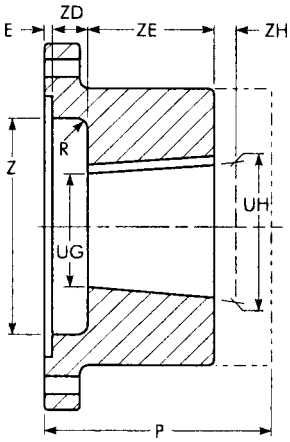

Table 8 - Standard AISE AC & DC Mill Motor Coupling Selections

Motor Frame Sizes			coupling slze*	E	R	UG	UH	Keyway	Z	ZD	ZE	ZG	ZH +,XXX -,000
2 602	802 A,B&C	AC 1,2 &4	1015G 1020G 1025G	2,5 2,5 2,5	7,9	36,5	44,5	12,70x6,35	82,55	23,9	76,2	1,5 5,6 12,4	0,61
603 604	803 804	...	1015G 1020G 1025G 1030G	2,5 2,5 2,5 2,5	9,7	41,53	50,80	12,70x6,35	85,73	25,4	88,9	0,0 4,1 10,9 19,1	0,74
606	806	AC 8 &12	1020G 1025G 1030G 1035G	2,5 2,5 2,5 2,5	9,7	52,91	63,50	12,70x6,35	101,60	28,4	102	1,0 7,6 15,7 25,4	0,74
608	808	...	1025G 1030G 1035G 1040G	2,5 2,5 2,5 4,1	12,7	64,3	76,20	19,05x6,35	133,35	31,8	114,3	4,6 12,7 22,4 32,0	0,74
610	810	AC180	1025G 1030G 1035G 1040G	2,5 2,5 2,5 4.1	12,7	70,64	82,55	19,05x6,35	142,88 *	35,1	114	1,3 9,7 19,3 29,0	0,86
612	812	AC 25&30	1030G 1035G 1040G 1045G	2,5 2,5 4,1 4,1	12,7	78,84	92,08	19,05x6,35	158,75	38,1	127	6,4 16,0 25,7 32,3	0,86
614	814	AC 40&50	1035G 1040G 1045G 1050G	2,5 4,1 4,1 5,1	12,7	94,72	107,95	25,40x9,53	174,63	41,1	127	12,7 22,6 29,2 40,6	0,86
616	816	...	1035G 1040G 1045G 1050G	2,5 4,1 4,1 5,1	15,7	102,92	115,80*** 117,48 117,48 117,48	31,75x9,53	195,33 200,03 200,03 200,03	44,5	124*** 140 140 140	9,7 19,3 25,9 37,1	0,86
618	818	...	1040G 1045G 1050G	4,1 4,1 5,1	15,7	113,13	127,00	31,75x12,70	212,73	33,5	152	30,5 37,3 48,5	0,97
620	820	...	1045G 1050G 1055G	4,1 5,1 5,1	19,1	131,37	149,23	38,10x19,05	247,65	44,5	172	25,9 37,3 51,3	0,97
622	822	...	1045G 1050G 1055G 1060G	4,1 5,1 5,1 6,6	19,1	139,57	158,75	38,10x19,05	247,65	60,2	184	10,2 21,6 35,3 41,7	0,97
624	824	...	1050G 1055G 1060G 1070G	5,1 5,1 6,6 8,4	19,1	153,34	177,80	38,10x19,05	247,65	60,2	235	21,3 35,3 41,7 59,7	0,97

* Refer to page 4 for General Information and other Reference Notes. Minimum coupling selections are based on coupling bore capacity. Check coupling rating for all selections. Refer to Pages 16, 17 & 18 for coupling dimensions.
** Spanner wrench required for Size 1025G.
*** For rigid hub only.

Table 9 - Taper and Counter bore Limitations +

Size *	Flex Hub						Rigid Hub					
	P Max+++	UG Min	UH Max	ZD Max	ZE Min	Keyway++	P Max+++	UG Min	UH Max	Z Max	ZE Min	Keyway++
1010G	102	12,7	50	18,5	42,9	14 x 4,5	104	12,7	60	76,2	39,6	18 x 5,5
1015G	114	19,1	65	25,4	49,3	18 x 5,5	117	19,1	80	85,9	46,2	22 x 7
1020G	130	25,4	78	29,5	62,0	22 x 7	133	25,4	98	102	58,4	28 x 8
1025G	149	31,8	98	36,3	77,0	28 x 8	152	31,8	118	143	73,7	32 x 9
1030G	165	38,1	111	44,5	91,2	32 x 9	168	38,1	140	159	87,9	36 x 10
1035G	184	50,8	134	54,1	106	36 x 10	171	50,8	163	175	102	40 x 11
1040G	203	63,5	160	63,8	121	40 x 11	191	63,5	196	213	114	45 x 22,5
1045G	244	76,2	183	70,4	135	45 x 12,5	249	76,2	216	248	130	50 x 14
1050G	295	88,9	200	81,8	153	45 x 12,5	300	88,9	235	273	147	56 x 16
1055G	298	102	220	95,8	168	50 x 14	303	102	266	298	173	63 x 16
1060G	305	114	244	102	188	56 x 16	311	114	290	330	186	63 x 16
1070G	310	127	289	120	221	63 x 16	313	127	340	381	220	80 x 20

\+ This table specifies the taper bore limitations for the usual requirements. For hubs no longer than those listed, refer to our Application Engineers.
++ Standard Long Hub length, consult our Application Engineers for longer lengths.
+++ Keyway shown is for maximum bore with square key.

Type G20 Steel Mill Flanged Sleeve
Double Engagement / Dimensions - Millimeters

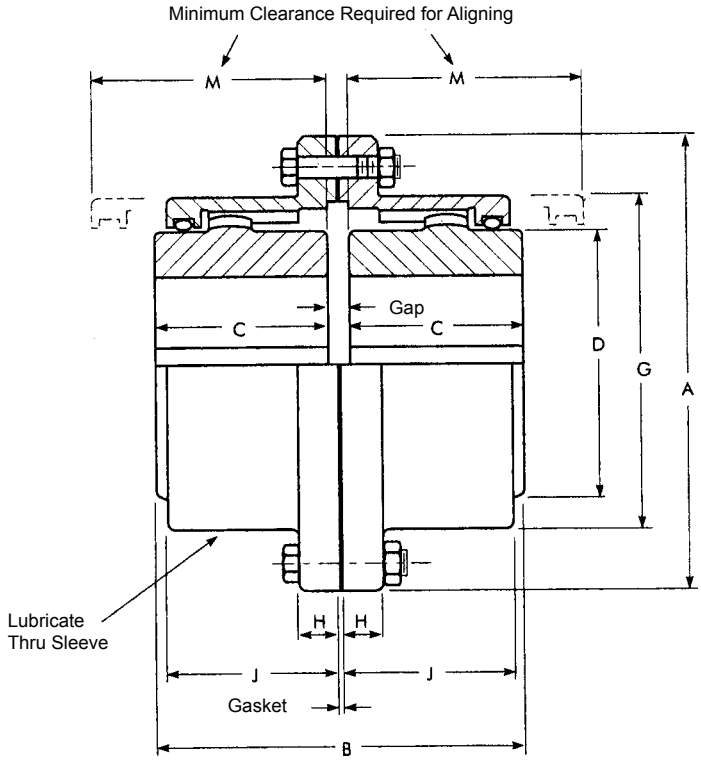

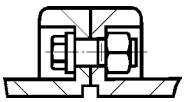

For Sizes 1010GF thru 1055GF, Type GF10 Shrouded Bolts furnished only when specified on order.

Size *	Torque Rating (Nm) †	Allow Speed (rpm)‡	Max Bore		Cpig Wt With No Bore - kg		Lube Wt (kg)	DIMENSIONS - Millimeters								
			(mm) •	(Inch) •	GF10	GF20		A	B	C	D	F	H	J	M	Gap
1010GF	1140	8000	50	1.875	4,08	4,54	0,0408	115,9	88,9	42,9	68,6	83,8	14,0	38,9	51	3
1015GF	2350	6500	65	2.375	7,71	9,07	0,0726	152,4	101,6	49,3	86,4	105,2	19,0	47,8	61	3
1020GF	4270	5600	78	2.875	13,6	15,9	0,113	177,8	127,0	62,0	105,2	126,5	19,0	59,4	77	3
1025GF	7470	5000	98	3.625	24,9	29,5	0,213	212,7	158,9	77,0	130,6	154,9	21,8	71,6	92	5
1030GF	12100	4400	111	4.125	38,6	43,1	0,363	239,7	187,4	91,2	152,4	180,3	21,8	83,8	107	5
1035GF	18500	3900	134	4.875	61,2	68,0	0,544	279,4	218,9	106,4	177,8	211,3	28,4	97,5	130	6
1040GF	30600	3600	160	5.750	88,5	97,5	0,907	317,5	247,3	120,6	209,6	245,4	28,4	111,3	145	6
1045GF	42000	3200	183	6.750	127	136	1,04	346,1	277,7	134,9	235,0	274,1	28,4	122,9	166	8
1050GF	56600	2900	200	7.375	177	191	1,77	388,9	314,3	153,2	254,0	305,8	38,1	140,7	183	8
1055GF	74000	2650	220	8.250	238	249	2,22	425,4	344,3	168,1	279,4	334,3	38,1	158,0	204	8
1060GF	90400	2450	244	9.125	…	306	3,18	457,2	384,4	188,2	304,8	366,0	25,4	169,2	229	8
1070GF	135000	2150	289	10.875	…	485	4,35	527,0	451,5	220,7	355,6	424,9	28,4	195,6	267	10

* Refer to Page 4 for General Information and Reference Notes.

Type GF52 Steel Mill Flanged Sleeve
Single Engagement / Dimensions - Millimeters

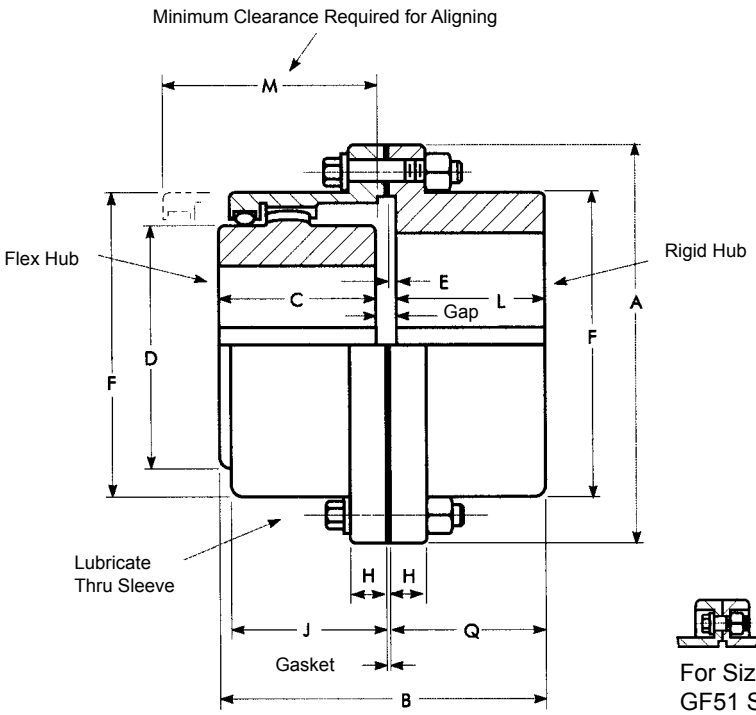

For Sizes 1010GF thru 1055GF, Type GF51 Shrouded Bolts furnished only when specified on order.

Size *	Max Bore (mm) •		Max Bore (inch) •		Wt -One Cpig No Bore - kg		Lube Wt Per Cpig (kg)	DIMENSIONS - Millimeters										
	Flex Hub	Rigid Hub	Flex Hub	Rigid Hub	G51	G52		A	C	D	E	F	H	J	L	M	Q	Gap
1010GF	50	65	1.875	2.375	4,08	4,54	0,0227	115,9	42,9	68,6	2,5	83,8	14,0	38,9	39,6	48	42,2	4
1015GF	65	80	2.375	2.938	8,16	9,07	0,0408	152,4	49,3	86,4	2,5	105,2	19,0	47,8	46,2	56	48,8	4
1020GF	78	98	2.875	3.625	13,6	15,9	0,0680	177,8	62,0	105,2	2,5	126,5	19,0	59,4	58,4	69	61,0	4
1025GF	98	118	3.625	4.375	24,9	27,2	0,118	212,7	77,0	130,6	2,5	154,9	21,8	71,6	73,7	81	76,2	5
1030GF	111	140	4.125	5.125	38,6	43,1	0,181	239,7	91,2	152,4	2,5	180,3	21,8	83,8	87,9	94	90,4	5
1035GF	134	163	4.875	5.875	61,2	68,0	0,272	279,4	106,4	177,8	2,5	211,3	28,4	97,5	102,1	107	104,6	6
1040GF	160	196	5.750	7.250	90,7	99,8	0,467	317,5	120,6	209,6	3,8	245,4	28,4	111,3	115,6	122	119,4	7
1045GF	183	216	6.750	8.125	129,3	136,1	0,557	346,1	134,9	235,0	3,8	274,1	28,4	122,9	130,8	135	134,6	8
1050GF	200	235	7.375	9.000	181,4	195,0	0,907	388,9	153,2	254,0	5,1	305,8	38,1	140,7	147,3	152	152,4	9
1055GF	220	266	8.250	10.000	251,7	263,1	1,13	425,4	168,1	279,4	5,1	334,3	38,1	158,0	172,7	173	177,8	9
1060GF	244	290	9.125	11.000	…	234,3	1,70	457,2	188,2	304,8	6,6	366,0	25,4	169,2	186,4	183	193,0	10
1070GF	289	340	10.875	13.000	…	508,0	2,27	527,0	220,7	355,6	8,4	424,9	28,4	195,6	220,2	208	228,6	13

* Refer to Page 4 for General Information and Reference Notes.

Type G52 Steel Mill Flanged Sleeve Floating Shafts / Dimensions - Millimeters

A standard floating shaft assembly consists of two standard single engagement couplings, two gap discs and a connecting shaft.

A floating shaft can eliminate the need for additional bearing supports along spanning shaft because the shaft is supported at the ends by connected equipment through the single engagement couplings.

Flex Hubs on Floating Shaft (RFFR)

Assembly of the flex hubs on the floating shaft allows for easier replacement in case of wear and allows the rigid hubs with their increased bore capacity to be used on the connected equipment shafts. This frequently means a smaller coupling size can be utilised.

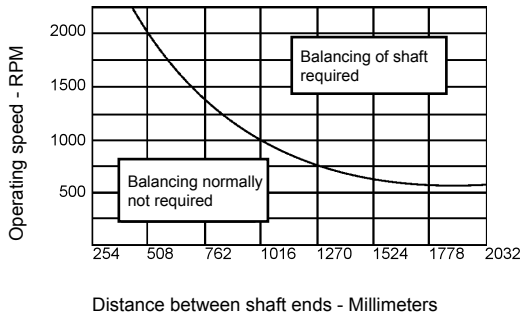

Rigid Hubs on Floating Shaft (FRRF)

When the rigid hubs are on the floating shaft, shorter shaft spans can be accommodated, since no cover drawback is required. Since the flex hubs are outboard, the points of articulation are further apart, providing greater offset misalignment capacity.

Solid Floating Shaft Selection

Single Engagement Type GF52 couplings are used with floating shafts in horizontal applications. Select floating shafts as follows:

1. Use the Standard or Formula Selection Methods, Page 5 to select the couplings. **Record the Required Minimum Coupling Rating** from standard selection method or **Selection Torque** from formula selection method.
2. From table below select a shaft diameter that has an assembly torque rating equal to or greater than the system or selection torque determined in coupling selection.
3. Check maximum 'BE' for the shaft diameter selected and running speed for shaft length required from table below. Refer to graph at left to determine if shaft requires balancing.
4. If the application shaft length exceeds the maximum "BE" listed, select the next larger shaft diameter or the next larger size coupling. Consult the Factory for higher speeds or longer shaft lengths than listed below.

NOTE: For conditions that require a larger size coupling, consider a Tubular Shaft Design, refer complete application details to our Application Engineers

Size *	Assembly Torque Rating ** (Nm) †	Floating Shaft										
		SB Shaft End Diameter (mm)	SD Shaft Diameter (mm)	Weight (kg per mm)	WR^2 (kgM^2 per mm)	Maximum BE (mm) for Various RPM's §						
						1750	1430	1170	870	720	580	540 or less
1010GF	493	38,1	39,7	0,00964	0,00000196	1371	1524	1676	1955	2159	2387	2463
	1140	47,3	50,8	0,0159	0,00000518	1549	1727	1905	2209	2438	2717	2794
1015GF	1170	50,8	54,0	0,0179	0,00000657	1600	1778	1955	2286	2514	2794	2870
	2350	60,3	63,5	0,0248	0,0000126	1752	1930	2133	2463	2717	3022	3124
1020GF	2280	63,5	66,7	0,0273	0,0000152	1778	1981	2184	2540	2794	3098	3200
	4270	73,0	76,2	0,0557	0,0000259	1905	2108	2336	2717	2971	3327	3429
1025GF	4460	79,4	82,6	0,0420	0,0000357	1981	2209	2438	2819	3098	3454	3556
	7470	92,1	95,2	0,0559	0,0000634	2133	2362	2616	3022	3237	3708	3835
1030GF	8500	98,4	101,6	0,0636	0,0000820	2209	2438	2692	3124	3454	3835	3962
	12100	104,8	108,0	0,0718	0,000104	2260	2514	2794	3225	3556	3962	4064
1035GF	13300	114,3	120,6	0,0896	0,000163	2413	2667	2946	3403	3759	4191	4292
	18500	123,8	127,0	0,0993	0,000200	2463	2717	3022	3505	3860	4292	4419
1040GF	24300	139,7	146,0	0,131	0,000350	2641	2921	3251	3759	4140	4597	4749
	30600	146,0	152,4	0,143	0,000415	2692	2997	3302	3835	4216	4699	4851
1045GF	31600	152,4	165,1	0,168	0,000572	2819	3124	3454	3987	4394	4902	5029
	42000	171,5	203,2	0,254	0,00131	3124	3454	3810	4445	4876	5435	5588
1050GF	37900	161,9	165,1	0,168	0,000572	2819	3124	3454	3987	4394	4902	5029
	56600	187,3	203,2	0,254	0,00131	3124	3454	3810	4445	4876	5435	5588
1055GF	37900	161,9	165,1	0,168	0,000572	2819	3124	3454	3987	4394	4902	5029
	74000	200,0	203,2	0,254	0,00131	3124	3454	3810	4445	4876	5435	5588
1060GF	71400	200,0	203,2	0,254	0,00131	3124	3454	3810	4445	4876	5435	5588
	90400	215,9	217,4	0,291	0,00172	3225	3581	3962	4597	5054	5613	5791
1070GF	71400	200,0	203,2	0,254	0,00131	3124	3454	3810	4445	4876	5435	5588
	135000	241,3	242,8	0,363	0,00268	3403	3784	4191	4851	5334	5943	6121

* Refer to Page 4 for General Information and Reference Notes.
** Assembly torque rating is limited by coupling size, shaft end diameter or both.

Type GF52 Standard Flanged Sleeve
Floating Shaft Single Engagement / Dimensions - Millimeters

Flex Hubs on Floating Shaft (RFFR)

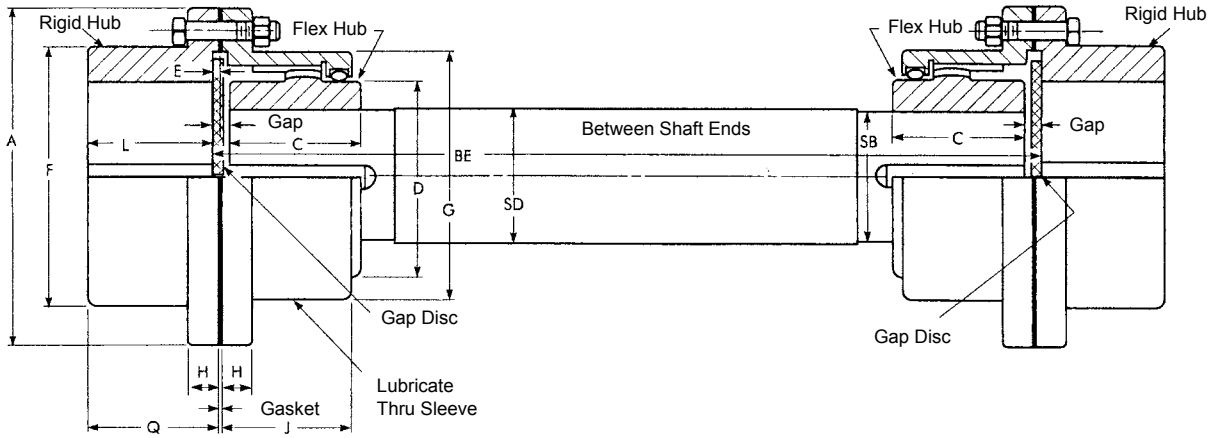

Rigid Hubs on Floating Shaft (FRRF)

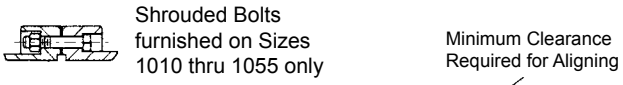

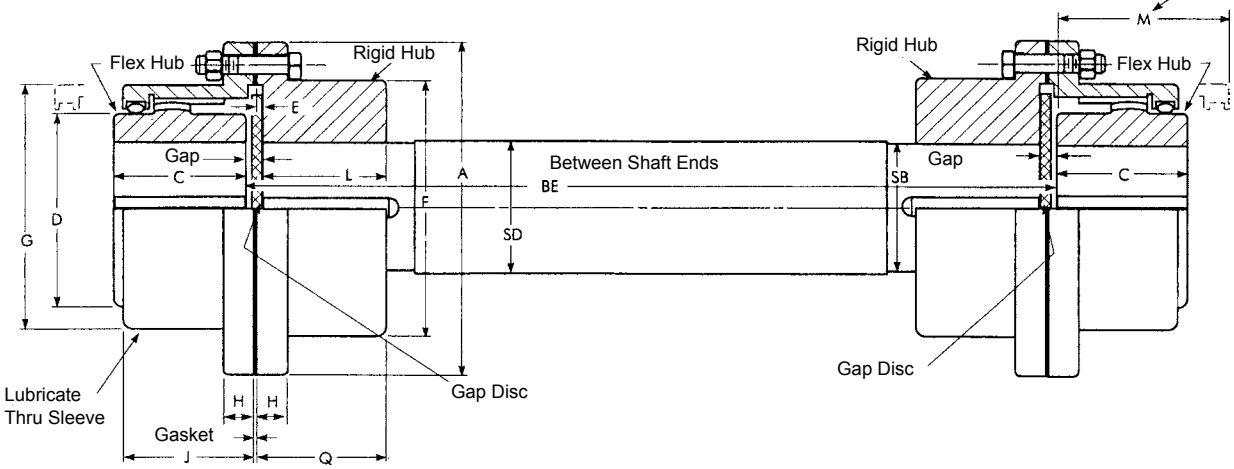

Size *	Max Bore (mm)		Max Bore (inch)		Wt -One Cpig No Bore - kg		Lube Wt Per Cpig (kg)	DIMENSIONS - Millimeters												
	Flex Hub	Rigid Hub	Flex Hub	Rigid Hub	G51	G52		A	BE Min RFFR	BE Min FRRF	C	D	E	F	H	J	L	M	Q	Gap
1010GF	50	65	1.875	2.375	4,08	4,54	0,0227	115,9	133	92	42,9	68,6	2,5	83,8	14,0	38,9	39,6	48	42,2	4
1015GF	65	80	2.375	2.938	8,16	9,07	0,0408	152,4	159	105	49,3	86,4	2,5	105,2	19,0	47,8	46,2	56	48,8	4
1020GF	78	98	2.875	3.625	13,6	15,9	0,0680	177,8	197	129	62,0	105,2	2,5	126,5	19,0	59,4	58,4	69	61,0	4
1025GF	98	118	3.625	4.375	24,9	27,2	0,118	212,7	241	162	77,0	130,6	2,5	154,9	21,8	71,6	73,7	81	76,2	5
1030GF	111	140	4.125	5.125	38,6	43,1	0,181	239,7	279	189	91,2	152,4	2,5	180,3	21,8	83,8	87,9	94	90,4	5
1035GF	134	163	4.875	5.875	61,2	68,0	0,272	279,4	324	219	106,4	177,8	2,5	211,3	28,4	97,5	102,1	107	104,6	6
1040GF	160	196	5.750	7.25	90,7	99,8	0,467	317,5	419	248	120,6	209,6	3,8	245,4	28,4	111,3	115,6	122	119,4	7
1045GF	183	216	6.750	8.125	129,3	136,1	0,557	346,1	508	281	134,9	235,0	3,8	274,1	28,4	122,9	130,8	135	134,6	8
1050GF	200	235	7.375	9.000	181,4	195,0	0,907	388,9	533	316	153,2	254,0	5,1	305,8	38,1	140,7	147,3	152	152,4	9
1055GF	220	266	8.250	10.000	251,7	263,1	1,13	425,4	572	367	168,1	279,4	5,1	334,3	38,1	158,0	172,7	173	177,8	9
1060GF	244	290	9.125	11.000	…	324,3	1,70	457,2	597	397	188,2	304,8	6,6	366,0	25,4	169,2	186,4	183	193,0	10
1070GF	289	340	10.875	13.000	…	508,0	2,27	527,0	673	470	220,7	355,6	8,4	424,9	28,4	195,6	220,2	208	228,6	13

* Refer to Page 4 for General Information and Reference Notes.

Type GF32 Steel Mill Flanged Sleeve Spacer / Dimensions - Millimeters

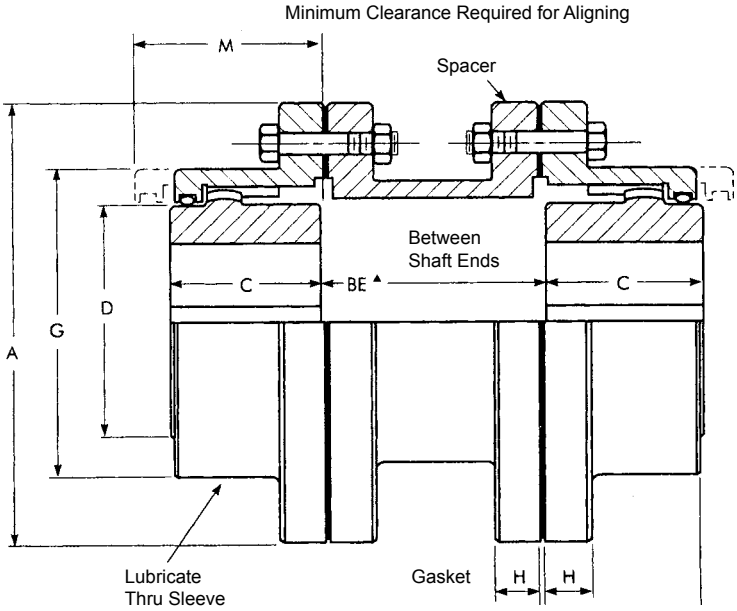

Size *	Torque Rating ** (Nm) †	Allow Speed (rpm)‡	Max Bore		Cpig Wt - kg		Lube Wt - kg		DIMENSIONS - Millimeters								
			(mm)•	(Inch)•	Cpig Wt With No Bore and Min BE	Extra Spacer Wt per mm of Length	Min Wt Less Spacer	Plus per mm of Spacer Length	A	BE Min G31	BE Min G32	C	D	F	H	J	M
1010GF	1140	7,000	50	1.875	6,80	0,0120	0,0408	…	115,9	82	82	42,9	68,6	83,8	14,0	38,9	48
1015GF	2350	5,500	65	2.375	13,6	0,0127	0,0726	…	152,4	82	82	49,3	86,4	105,2	19,0	47,8	56
1020GF	4270	4,600	78	2.875	20,4	0,0166	0,113	0,000536	177,8	82	82	62,0	105,2	126,5	19,0	59,4	69
1025GF	7470	4,000	98	3.625	38,6	0,0205	0,227	0,00107	212,9	108	95	77,0	130,6	154,9	21,8	71,6	81
1030GF	12100	3,600	111	4.125	54,4	0,0236	0,363	0,00107	239,8	108	95	91,2	152,4	180,3	21,8	83,8	94
1035GF	18500	3,100	134	4.875	88,5	0,0359	0,544	0,00214	279,4	130	120	106,4	177,8	211,3	28,4	97,5	107
1040GF	30600	2,800	160	5.75	122,5	0,0500	0,907	0,00357	317,5	130	120	120,6	209,6	245,4	28,4	111,3	122
1045GF	42000	2,600	183	6.75	166	0,0736	1,04	0,00357	346,1	133	120	134,9	235,0	274,1	28,4	122,9	135
1050GF	56600	2,400	200	7.375	238	0,0814	1,77	0,00357	388,9	184	146	153,2	254,0	305,8	38,1	140,7	152
1055GF	74000	2,200	220	8.25	306	0,0895	2,22	0,00357	425,4	184	146	168,1	279,4	334,3	38,1	158,0	173
1060GF	90400	2,100	244	9.125	358	0,117	3,18	0,00357	457,2	…	146	188,2	304,8	366,0	25,4	169,2	183
1070GF	135000	1,800	289	10.875	562	0,141	4,35	0,00357	527,0	…	146	220,7	355,6	424,9	28,4	195,6	208

* Refer to Page 4 for General Information and Reference Notes.

Table 7 - Type GF32 Standard Stock Spacer Lengths

Distance Between Shaft Ends		Pump Std	Coupling Size					
mm	Inches		1010	1015	1020	1025	1030	1035
89	3.500	ANSI	•	•				
111	4.375	ANSI	•		•			
114	4.500	MISC						• **
127	5.000	ANSI	•	•	•	•	•	
178	7.000	ANSI			•	•	•	

** Bolt holes staggered for assembly clearance.

Type GF Standard Flanged Sleeve
Mill Motor & Taper Bores / Dimensions - Millimeters

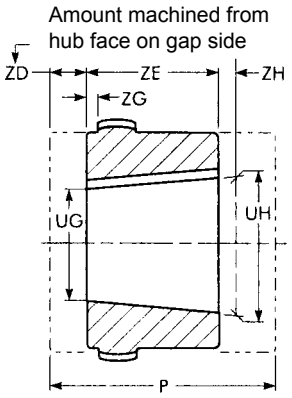

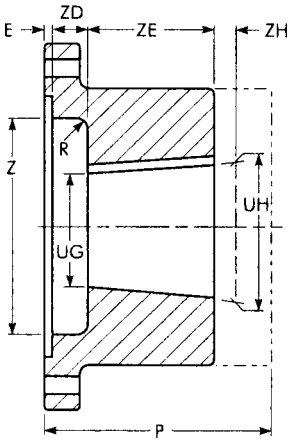

Table 8 - Standard AISE AC & DC Mill Motor Coupling Selections

Motor Frame Sizes			coupling size*	E	R	UG	UH	Keyway	Z	ZD	ZE	ZG	ZH +,XXX -,000
2 602	802 A,B&C	AC 1,2 &4	1015GF 1020GF 1025GF	2,5 2,5 2,5	7,9	36,5	44,5	12,70x6,35	82,55	23,9	76,2	1,5 5,6 12,4	0,61
603 604	803 804	...	1015GF 1020GF 1025GF 1030GF	2,5 2,5 2,5 2,5	9,7	41,53	50,80	12,70x6,35	85,73	25,4	88,9	0,0 4,1 10,9 19,1	0,74
606	806	AC 8 &12	1020GF 1025GF 1030GF 1035GF	2,5 2,5 2,5 2,5	9,7	52,91	63,50	12,70x6,35	101,60	28,4	102	1,0 7,6 15,7 25,4	0,74
608	808	...	1025GF 1030GF 1035GF 1040GF	2,5 2,5 2,5 4,1	12,7	64,3	76,20	19,05x6,35	133,35	31,8	114,3	4,6 12,7 22,4 32,0	0,74
610	810	AC180	1025GF 1030GF 1035GF 1040GF	2,5 2,5 2,5 4.1	12,7	70,64	82,55	19,05x6,35	142,88 **	35,1	114	1,3 9,7 19,3 29,0	0,86
612	812	AC 25&30	1030GF 1035GF 1040GF 1045GF	2,5 2,5 4,1 4,1	12,7	78,84	92,08	19,05x6,35	158,75	38,1	127	6,4 16,0 25,7 32,3	0,86
614	814	AC 40&50	1035GF 1040GF 1045GF 1050GF	2,5 4,1 4,1 5,1	12,7	94,72	107,95	25,40x9,53	174,63	41,1	127	12,7 22,6 29,2 40,6	0,86
616	816	...	1035GF 1040GF 1045GF 1050GF	2,5 4,1 4,1 5,1	15,7	102,92	115,80*** 117,48 117,48 117,48	31,75x9,53	195,33 200,03 200,03 200,03	44,5	124** 140 140 140	9,7 19,3 25,9 37,1	0,86
618	818	...	1040GF 1045GF 1050GF	4,1 4,1 5,1	15,7	113,13	127,00	31,75x12,70	212,73	33,5	152	30,5 37,3 48,5	0,97
620	820	...	1045GF 1050GF 1055GF	4,1 5,1 5,1	19,1	131,37	149,23	38,10x19,05	247,65	44,5	172	25,9 37,3 51,3	0,97
622	822	...	1045GF 1050GF 1055GF 1060GF	4,1 5,1 5,1 6,6	19,1	139,57	158,75	38,10x19,05	247,65	60,2	184	10,2 21,6 35,3 41,7	0,97
624	824	...	1050GF 1055GF 1060GF 1070GF	5,1 5,1 6,6 8,4	19,1	153,34	177,80	38,10x19,05	247,65	60,2	235	21,3 35,3 41,7 59,7	0,97

* Refer to page 4 for General Information and other Reference Notes. Minimum coupling selections are based on coupling bore capacity. Check coupling rating for all selections. Refer to Pages 21 thru 25 for coupling dimensions.
** Spanner wrench required for Size 1025G.
*** For rigid hub only.

Table 9 - Taper and Counter bore Limitations +

Size *	Flex Hub						Rigid Hub					
	P Max+++	UG Min	UH Max	ZD Max	ZE Min	Keyway++	P Max+++	UG Min	UH Max	Z Max	ZE Min	Keyway++
1010GF	102	12,7	50	18,5	42,9	14 x 4,5	104	12,7	60	76,2	39,6	18 x 5,5
1015GF	114	19,1	65	25,4	49,3	18 x 5,5	117	19,1	80	85,9	46,2	22 x 7
1020GF	130	25,4	78	29,5	62,0	22 x 7	133	25,4	98	102	58,4	28 x 8
1025GF	149	31,8	98	36,3	77,0	28 x 8	152	31,8	118	143	73,7	32 x 9
1030GF	165	38,1	111	44,5	91,2	32 x 9	168	38,1	140	159	87,9	36 x 10
1035GF	184	50,8	134	54,1	106	36 x 10	171	50,8	163	175	102	40 x 11
1040GF	203	63,5	160	63,8	121	40 x 11	191	63,5	196	213	114	45 x 22,5
1045GF	244	76,2	183	70,4	135	45 x 12,5	249	76,2	216	248	130	50 x 14
1050GF	295	88,9	200	81,8	153	45 x 12,5	300	88,9	235	273	147	56 x 16
1055GF	298	102	220	95,8	168	50 x 14	303	102	266	298	173	63 x 16
1060GF	305	114	244	102	188	56 x 16	311	114	290	330	186	63 x 16
1070GF	310	127	289	120	221	63 x 16	313	127	340	381	220	80 x 20

\+ This table specifies the taper bore limitations for the usual requirements. For hubs no longer than those listed, refer to our Application Engineers.
++ Standard Long Hub length, consult our Application Engineers for longer lengths.
+++ Keyway shown is for maximum bore with square key.

Table 10 - Recommended Commercial Keys for Bores with One Key
Millimeters & Inches

Shaft Diameter		Key	Shaft Diameter		Key	Shaft Diameter		Key	Shaft Diameter		Key
Over	Through		Over	Through		Over	Through		Over	Through	
6	8	2 x 2	38	44	12 x 8	95	110	28 x 16	260	290	63 x 32
8	10	3 x 3	44	50	14 x 9	110	130	32 x 18	290	330	70 x 36
10	12	4 x 4	50	58	16 x 10	130	150	36 x 20	330	380	80 x 40
12	17	5 x 5	58	65	18 x 11	150	170	40 x 22	380	440	90 x 45
17	22	6 x 6	65	75	20 x 12	170	200	45 x 25	440	500	100 x 50
22	30	8 x 7	75	85	22 x 14	200	230	50 x 28	…	…	…
30	38	10 x 8	85	95	25 x 14	230	260	56 x 32	…	…	…

INCHES (Bores per BS 1916, Keyway to BS 46 : Part 1 : 1958)

Shaft Diameter		Key	Shaft Diameter		Key	Shaft Diameter		Key	Shaft Diameter		Key
Over	Through		Over	Through		Over	Through		Over	Through	
.438	.562	.125 x .125	1.750	2.250	.500 x .500	4.500	5.500	1.250 x 1.250	11.000	13.000	3.000 x 2.000
.562	.875	.188 x .188	2.250	2.750	.625 x .625	5.500	6.500	1.500 x 1.500	13.000	15.000	3.500 x 2.500
.875	1.250	.250 x .250	2.750	3.250	.750 x .750	6.500	7.500	1.750 x 1.500	15.000	18.000	4.000 x 3.000
1.25	1.375	.312 x .312	3.250	3.750	.875 x .875	7.500	9.000	2.000 x 1.500	18.000	22.000	5.000 x 3.500
1.375	1.750	.375 x .375	3.750	4.500	1.000 x 1.000	9.000	11.000	2.500 x 1.750	…	…	…

Table 11 - Shaft Diameters & Ratings for
50 Hertz Metric Motors & NEMA 60 Hertz Motors

50 HERTZ METRIC MOTORS (kW)

Frame Size	80	90S	90L	100L	112M	132S	132M	160M	160L	180M	180L		225S	225M	250S	250M	280S	280M
Shaft Dia	19	24	24	28	28	38	38	42	42	48	48	55	55 60	55 60	60,65 70	60,65 70	65,75 80	65,75 80
3000 rpm	0,75 1,10	1,5	2,2	3,0	4	5,5 7,5		11 15	18,5	22		30 37	45	45	55	55 75	75 90	90 110
1500 rpm	0,55 0,75	1,1	1,5	2,2 3,0	4	5,5	7,5	11	15	18,5	22	30	37 45	45	55	55 75	75 90	90 110
1000 rpm	0,37 0,55	0,75	1,1	1,5	2,2	3	4 5,5	7,5	11		15	18,5 22	30	30	37	37 45	45 50	55 75
750 rpm	0,18 0,25	0,37	0,55	0,75 1,1	1,5	2,2	3	4 5,5	7,5		11	15	18,5	22	30	30 37	37 45	45 55

NEMA 60 HERTZ MOTORS (hp)

Frame Size		T Frames																		TS Frames									
		143	145	182	184	213	215	254	256	284	286	324	326	364	365	404	405	444	445	284	286	324	326	364	365	404	405	444	445
Shaft Dia		0.88	0.88	1.13	1.13	1.38	1.38	1.63	1.63	1.88	1.88	2.13	2.13	2.38	2.38	2.88	2.88	3.38	3.38	1.63	1.63	1.88	1.88	1.88	1.88	2.13	2.13	2.38	2.38
3600 rpm	Drip Proof	1½		5	7½	10	15	20	25	30	40	50	60	75	100	125	150	200	250	30	40	50	60	75	100	125	150	200	250
	Enclosed	1½	2	3	5	7½	10	15	20	25	30	40	50	60	75	…	100	125	150	25	30	40	50	60	75	…	100	125	150
1800 rpm	Drip Proof	1	1½ -2	3	5	7½	10	15	20	25	30	40	50	60	75	100	125	150	200	25	30	40	50	60	75	100	125	150	200
	Enclosed	1	1½ -2	3	5	7½	10	15	20	25	30	40	50	60	75	…	100	125	150	25	30	40	50	60	75	…	100	125	150
1200 rpm	Drip Proof & Enclosed	¾	1	1½	2	3	5	7½	10	15	20	25	30	40	50	60	75	100	125	15	20	25	30	40	50	60	75	100	125
900 rpm	Drip Proof & Enclosed	½	¾	1	1½	2	3	5	7½	10	15	20	25	30	40	50	60	75	100	10	15	20	25	30	40	50	60	75	100

Table 12 - Recommended Bore Tolerances Coupling Hubs - Millimeters

Nominal	Bore Diameter Tolerance
Up to 50	M7
Over 50 to 80	K7
Over 80 to 100	K7
Over 100 to 200	K7
Over 200 to 355	K7
Over 355 to 500	K7

Coupling Misalignment

Maximum life and minimum maintenance for the coupling and connected machinery will result if couplings are accurately aligned. Coupling life expectancy between initial alignment and maximum operating limits is a function of load, speed and lubrication. For applications requiring greater misalignment, refer to our Application Engineers.

Table 13 - Type G and GC Gear Coupling Angular Misalignment Capacity **

Types	Installation	Operational
G	0,12º	0,75º
GC	0,12º	0,75º

** Degrees listed are per gear mesh

Table 14 - Floating Shaft (Solid) Balancing

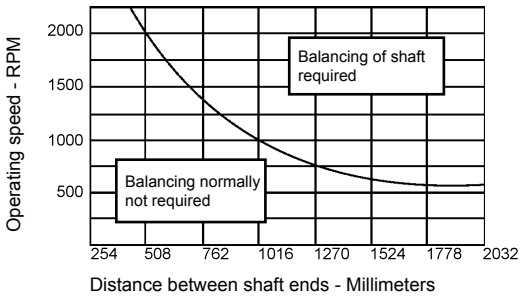

ANGULAR MISALIGNMENT

Angular misalignment is expressed in degrees and as the difference between the value of X minus Y, as illustrated.

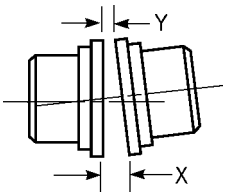

PARALLEL OFFSET MISALIGNMENT

Parallel misalignment is the distance P between shaft centerlines as shown.

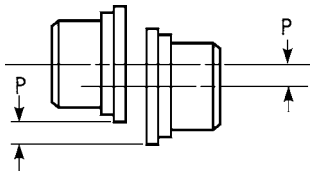

NOTES

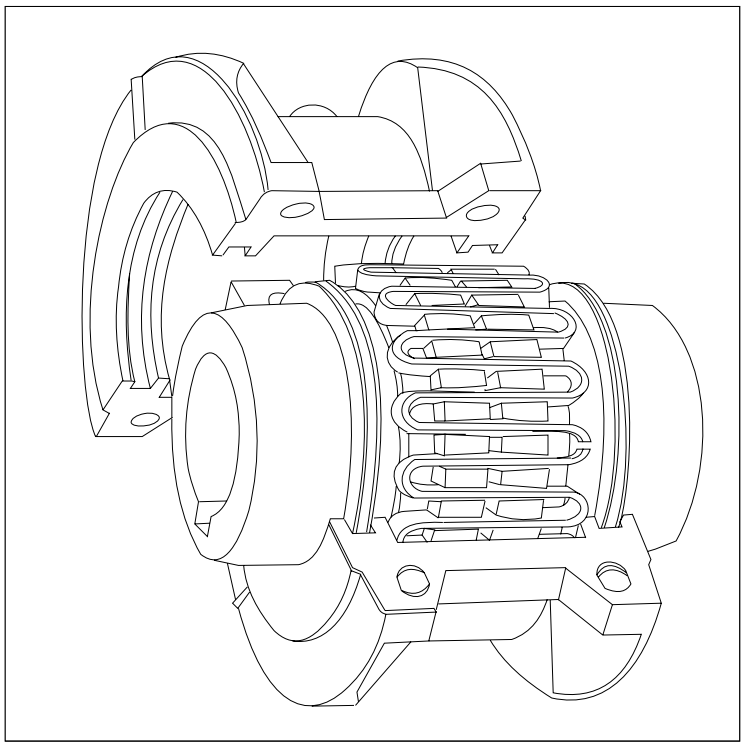

GRID

Double flexing steel grid couplings

SERIES X

GRID TYPE COUPLINGS

Grid Couplings

A general purpose, lubricated design that combines the economy and high torque capacity of a coupling with the, torsional flexibility of an elastomer coupling. Backed by a 5-year lubrication warranty, our Grid couplings require no periodic maintenance when lubricated with our LTG (Long Term Grease) at installation. Featuring 25 sizes, Grid couplings can accommodate torque loads of 932 000 Nm and shaft diameters of 508 millimeters.

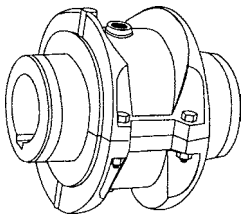	**Type T10 Close Coupled** A double flexing, close-coupled design for use in four bearing systems. Features a horizontally split cover which allows for grid replacement without the movement of the connected equipment. (See Page 35)	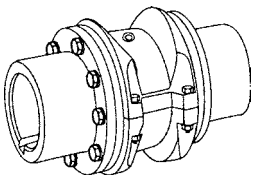	**Type T31 Full Spacer** Complete centre section drops out for easy service of connected equipment bearings and seals. Ideal for pump applications. (See Page 37)
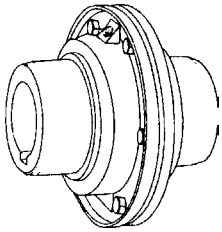	**Type T20 Close Coupled Coupling -** A double flexing design featuring a vertically split steel cover. Ideal for higher running speeds. (See Page 36)	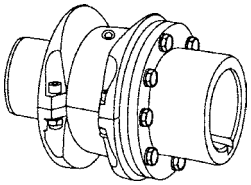	**Type T35 Half Spacer Coupling** An economical spacer design for easy service of connected equipment bearings and seals. Ideal for pump applications. (See Page 38)
			**Type T50 Floating Shaft Coupling** Double piloted design for connecting equipment where the distance between shafts is too large for a spacer type coupling. (See Pages 39 - 40)

Contact our Application Engineers for information on these additional Grid Coupling designs

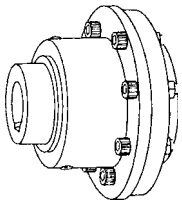	**Type T70 High Speed Coupling** Designed for operating speeds beyond those of the T10 and T20 designs. Features a one-piece cover and balanced components.	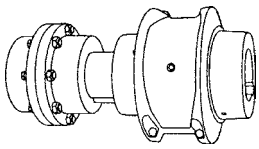	**Type T10/G82 Spacer Coupling** A combination of two standard couplings. Utilizes readily available components for an economical price and shorter lead time than T31/T35 couplings.
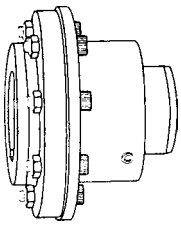	**Type T50 Piloted Coupling** For use on line shaft applications. Can be used in place of single engagement gear couplings to provide torsional resiliency and lower overall operating cost.	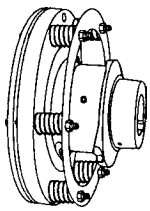	**Type T41/T44 Controlled Torque Coupling -** Provides adjustable slipping action to protect connected equipment from shock, jams, or temporary overloads.
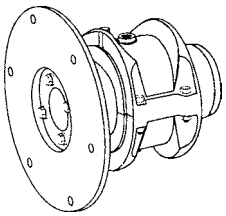	**Type T90 Flywheel Coupling -** Used primarily to connect the flywheel of an engine to the driven machinery. It provides for higher torque ratings with resulting smaller sizes and lower costs than elastomer couplings.	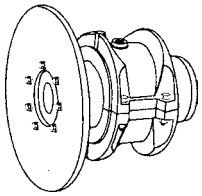	**Type T63 Disc Brake Couplings** Proven to be far superior to drum-type brakes in cost, construction and performance.
Warning! Mixing grid coupling components from different manufacturers may cause premature failure and possible personal injury or property damage from flying debris.		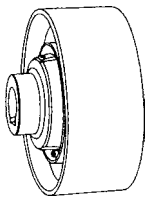	**Type BW Brakewheel Coupling -** Provides a built-in braking surface right at or near the centerline of the coupling ... saves space and money.

GENERAL DESCRIPTION

Grid Couplings

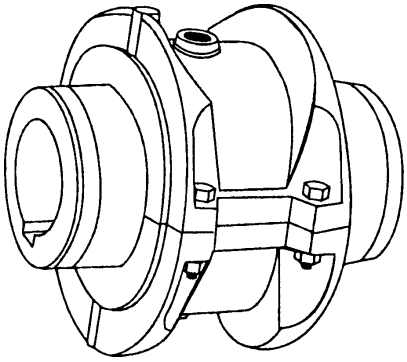

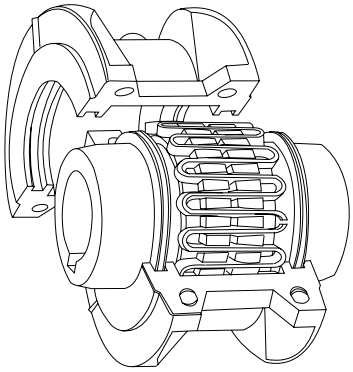

The Simplest, Most Cost- Effective Couplings For High Torque Applications.

With overall savings in initial costs, spare parts costs, and labour costs for installation, alignment and replacement - plus improved ratings and a 5 Year Heavy-Duty Warranty - it's easy to see what our Grid Couplings have over the competition. No other coupling in the torque range can touch our Grid couplings for cost-effective performance and reliability.

Features That Give Grid Couplings The Lowest Lifetime Operating Cost

Longer Life

Tapered grids, made of high strength alloy steel, are quenched and tempered to spring hardness. The grid surface is then precision shot peened to compress the surface molecules.

The effect is a dramatic increase in rating, providing reserve strength for longer life or allowing a smaller size coupling to be selected. This precision technology was originally used in the production of sophisticated aircraft components.

Extended Maintenance Periods

Now you can install our Grid couplings and lubricate it with our Long Term Grease (LTG) and forget periodic, routine maintenance. Our LTG Grease was developed specifically for couplings. It resists the separation of the oil and thickening agent that occurs in typical greases. The initial use of LTG Grease will eliminate routine lubrication cycles.

Quick, Easy Installation ... Replace-In-Place Design

The grid is the wearing member of our Grid coupling and it is a fraction of the complete coupling cost. Tapered grids are accessible through the quickly removable cover. The replace-in-place design of the replacement grids allows them to be dropped in without the need to replace hubs or move and realign shafts and connected equipment as required with gear couplings and many elastomer designs.

Equipment Protection Against Shaft Misalignment Design

The grid is free to rock, pivot and float within the hub teeth. Generous misalignment capacity is provided without producing detrimental bearing side loads created by other coupling types.

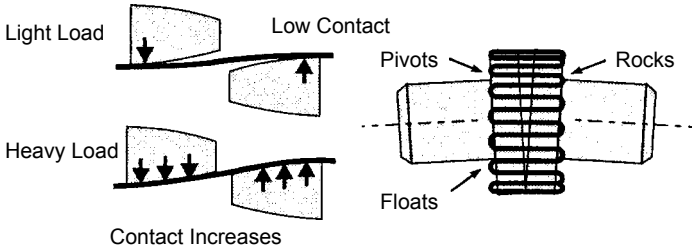

Equipment Protection Against Shock / Vibratory Loads

Torsional flexibility is the ability of our Grid Couplings to torsionally deflect when subjected to normal shock or vibratory loads, providing flexible accommodation to changing load conditions. It absorbs impact energy by spreading it over an increment of time. It damps vibration and reduces peak or shock loads by a much as 30%. It is a true shock absorber for rotary motion.

Versatile Designs

Two cover designs are available in the popular sizes. Standard spacer, piloted, high speed, brake wheel or disc, and controlled torque designs are also available.

Worldwide Availability

Grid couplings and component parts, in popular sizes and types, are available from our worldwide distribution network with the largest stock of any shaft coupling on the market. Our grid couplings are warranted for 5 Years when lubricated with our LTG Long Term Grease.

UNIT DESIGNATIONS

										Driving Hub				Driven Hub			
	Series	Size of Coupling				Type of Coupling				Driving Hub Bore & Keyway	Driving Hub Bore Diameter			Driven Hub Bore & Keyway	Driven Hub Bore Diameter		
	1	2	3	4	5	6	7	8	9	10	11	12	13	14	15	16	17
*	X																
Example	X	1	0	2	0	T	-	1	0	M	0	2	0	M	0	2	

1 - Series X

Range X

2, 3, 4, 5 - Size of Coupling

eg 1 0 2 0

6, 7, 8, 9 - Type of Coupling

Grid Coupled

T	-	1	0	Close Coupled (Horizontal Cover)
T	-	1	0	Close Coupled (Vertical Cover)
T	-	1	0	Full Spacer
T	-	1	0	Half Spacer

10 - Driven Hub Bore and Keyway

- M - Metric Bore Parallel Keyway
- T - Metric Bore Taper Keyway
- I - Inch Bore Parallel Keyway
- B - Inch Bore Taper Keyway
- P - Pilot Bore
- C - Customer Specified Metric
- S - Customer Specified Inch
- A - American Square Key
- H - Half Coupling

11, 12, 13 - Driving Hub Bore Diameter

eg 0 2 0

15, 16, 17 - Driven Hub Bore Diameter

eg 0 2 0

14 - Driven Hub Bore and Keyway

- M - Metric Bore Parallel Keyway
- T - Metric Bore Taper Keyway
- I - Inch Bore Parallel Keyway
- B - Inch Bore Taper Keyway
- P - Pilot Bore
- C - Customer Specified Metric
- S - Customer Specified Inch
- A - American Square Key
- H - Half Coupling

* This Page May Be Photocopied Allowing The Customer To Enter Their Order

Type T10
Close-Coupled Coupling / Dimensions - Millimeters

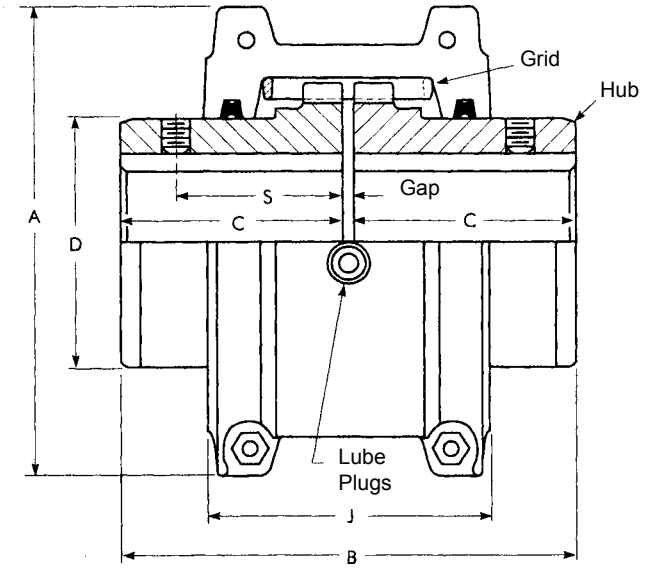

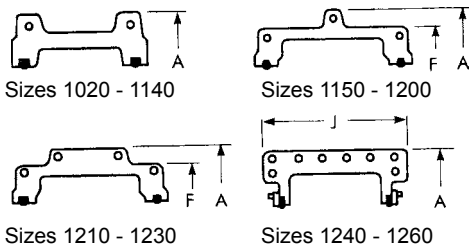

Sizes 1020 thru 1230T10 covers are cast aluminium alloy;
Sizes 1240 thru 1260T10 are fabricated steel.

SIZE *	Torque Rating (Nm)†	Allow Speed (rpm)‡	Max Bore		Cpig Wt With No Bore (kg)	Lube Wt (kg)	DIMENSIONS - Millimeters							
			(mm) •	(Inch) •			A	B	C	D	F	J	S	Gap
1020T	52	4500	28	1.125	1,91	0,0272	97,0	98,2	47,6	39,7	…	66,7	39,1	3
1030T	149	4500	35	1.375	2,59	0,0408	105,7	98,2	47,6	49,2	…	68,3	39,1	3
1040T	249	4500	43	1.625	3,36	0,0544	114,3	104,6	50,8	57,2	…	69,9	40,1	3
1050T	435	4500	50	1.875	5,44	0,0680	135,1	123,6	60,3	66,7	…	80,9	44,7	3
1060T	684	4350	56	2.125	7,26	0,0862	147,8	130,0	63,5	76,2	…	93,5	52,3	3
1070T	994	4125	67	2.500	10,4	0,113	158,8	155,4	76,2	87,3	…	96,8	53,8	3
1080T	2050	3600	80	3.000	17,7	0,172	190,5	180,8	88,9	104,8	…	115,6	64,5	3
1090T	3730	3600	95	3.500	25,4	0,254	211,1	199,8	98,4	123,8	…	122,2	71,6	3
1100T	6280	2440	110	4.000	42,2	0,426	251,0	246,2	120,6	142,1	…	155,4	…	5
1110T	9320	2250	120	4.500	54,4	0,508	269,7	259,0	127,0	160,3	…	161,5	…	5
1120T	13700	2025	140	5.000	81,2	0,735	307,8	304,4	149,2	179,4	…	191,5	…	6
1130T	19900	1800	170	6.000	121	0,907	345,9	329,8	161,9	217,5	…	195,1	…	6
1140T	28600	1650	200	7.250	178	1,13	384,0	374,4	184,2	254,0	…	201,2	…	6
1150T	39800	1500	215	8.000	227	1,95	453,1	371,8	182,9	269,2	391,2	271,5	…	6
1160T	55900	1350	240	9.000	309	2,81	501,9	402,2	198,1	304,8	436,9	278,4	…	6
1170T	74600	1225	280	10.000	448	3,49	566,9	437,8	215,9	355,6	487,2	307,3	…	6
1180T	103000	1100	300	11.000	619	3,76	629,9	483,6	238,8	393,7	554,7	321,1	…	6
1190T	137000	1050	335	12.000	776	4,40	675,6	524,2	259,1	436,9	607,8	325,1	…	6
1200T	186000	900	360	13.000	1057	5,62	756,9	564,8	279,4	497,8	660,4	355,6	…	6
1210T	249000	820	390	14.000	1424	10,5	844,6	622,6	304,8	533,4	750,8	431,8	…	13
1220T	336000	730	420	15.000	1785	16,1	920,8	663,2	325,1	571,5	822,2	490,2	…	13
1230T	435000	680	450	16.000	2267	24,0	1003,3	703,8	345,4	609,6	904,7	546,1	…	13
1240T	559000	630	480	17.000	2950	33,8	1087,1	749,6	368,3	647,7	…	647,7	…	13
1250T	746000	580	**	18.500	3833	50,1	1181,1	815,6	401,3	711,2	…	698,5	…	13
1260T	932000	540	**	20.000	4682	67,2	1260,9	876,6	431,8	762,0	…	762,0	…	13

* Refer to Page 4 for General Information and Reference Notes.
** Consult our Application Engineers

Type T20
Close-Coupled Coupling / Dimensions - Millimeters

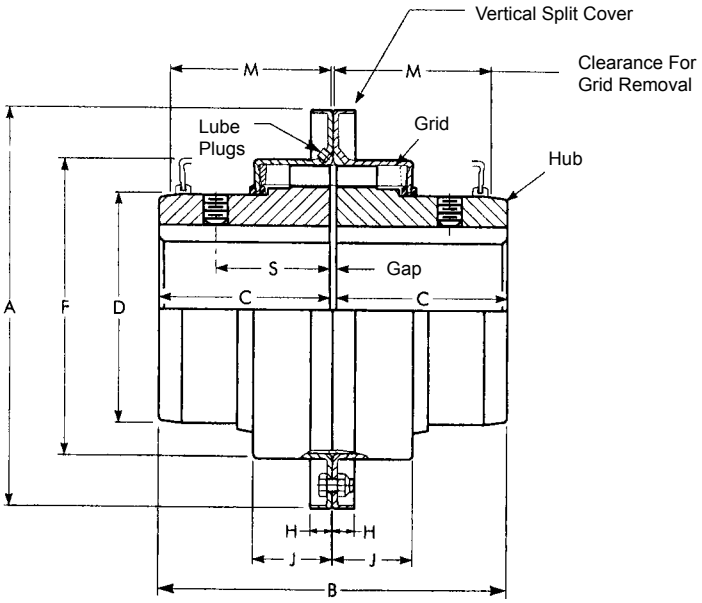

Size *	Torque Rating ** (Nm) †	Allow Speed (rpm)‡	Max Bore		Cpig Wt With No Bore (kg)	Lube Wt (kg)	DIMENSIONS - Millimeters									
			(mm)•	(Inch)•			A	B	C	D	F	H	J	M	S	Gap
1020T	52	6000	28	1.125	1,95	0,0272	112,3	98,2	46,7	39,7	64,3	9,7	23,9	47,8	39,1	3
1030T	149	6000	35	1.375	2,59	0,0408	121,8	98,2	46,7	49,2	73,8	9,7	24,9	47,8	39,1	3
1040T	249	6000	43	1.625	3,36	0,0544	129,8	104,6	50,8	57,2	81,8	9,7	25,9	50,8	40,1	3
1050T	435	6000	50	1.875	5,44	0,0680	148,8	123,6	60,3	66,7	97,6	11,9	30,5	60,5	44,7	3
1060T	684	6000	56	2.125	7,26	0,0862	163,1	130,0	63,5	76,2	111,1	12,7	31,8	63,5	52,3	3
1070T	994	5500	67	2.500	10,4	0,113	174,2	155,4	76,2	87,3	122,3	12,7	33,5	66,5	53,8	3
1080T	2050	4750	80	3.000	17,7	0,172	201,2	180,8	88,9	104,8	149,2	12,7	43,7	88,9	64,5	3
1090T	3730	4000	95	3.500	25,4	0,254	232,9	199,8	98,4	123,8	168,3	12,7	47,0	95,2	71,6	3
1100T	6280	3250	110	4.000	42,2	0,426	267,9	246,2	120,6	142,1	198,0	15,7	59,7	120,7	…	5
1110T	9320	3000	120	4.500	54,4	0,508	286,9	259,0	127,0	160,3	216,3	16,0	62,7	124,0	…	5
1120T	13700	2700	140	5.000	81,6	0,735	320,2	304,4	149,2	179,4	245,5	17,5	73,7	142,7	…	6
1130T	19900	2400	170	6.000	122	0,907	379,0	329,8	161,9	217,5	283,8	20,6	74,9	146,0	…	6
1140T	28600	2200	200	7.250	180	1,13	417,1	374,4	184,2	254,0	321,9	20,6	78,2	155,4	…	6
1150T	39800	2000	215	8.000	230	1,95	476,2	371,8	182,9	269,2	374,4	19,3**	107,3	203,2	…	6
1160T	55900	1750	240	9.000	321	2,81	533,4	402,2	198,1	304,8	423,9	30,0**	115,3	215,9	…	6
1170T	74600	1600	280	10.000	448	3,49	584,2	437,8	215,9	355,6	474,7	30,0**	120,1	226,1	…	6

* Refer to Page 4 for General Information and Reference Notes.
** Dimension “H” is to the end of the bolt on Sizes 1150 thru 1170. Bolts are not shrouded.

Type T31 Continuous Sleeve
Full Spacer / Dimensions - Millimeters

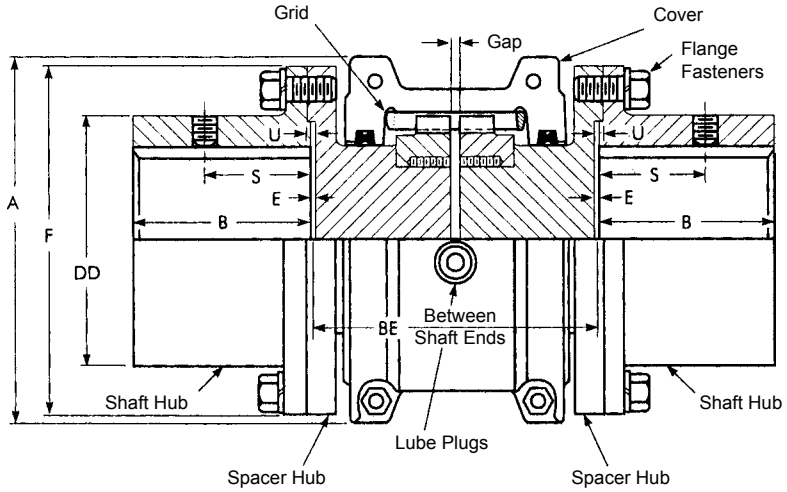

Size *	Torque Rating (Nm) †	Allow Speed (rpm)‡	Max B		Cpig Wt With No Bore (kg)	Lube Wt (kg)	DIMENSIONS - Millimeters										Flange Fasteners	
			(mm)•	(Inch)•			A	B	BE Min Min	BE Min Max	DD	E	F	S	U	Gap	No per Flange & SAE grade	Dia Inches
1020T	52	3600	35	1.375	3.86	0,0272	97,0	34,9	89	203	52,4	0,8	85,7	27,4	1,8	5	4-Gr 8	.250
1030T	149	3600	43	1.625	5,26	0,0408	105,7	41,3	89	216	59,5	0,8	93,7	31,5	1,8	5	8-Gr 8	.250
1040T	249	3600	56	2.125	8,44	0,0544	114,3	54,0	89	216	78,6	0,8	112,7	27,4	1,8	5	8-Gr 8	.250
1050T	435	3600	67	2.375	12,5	0,0680	135,1	60,3	111	216	87,3	0,8	125,4	40,6	1,8	5	8-Gr 8	.312
1060T	684	3600	80	2.875	19,6	0,0862	147,8	73,0	127	330	103,2	1,8	144,5	43,2	2,8	5	8-Gr 8	.375
1070T	994	3600	85	3.125	24,6	0,113	158,8	79,4	127	330	109,5	1,8	152,4	46,7	2,8	5	12-Gr 8	.375
1080T	2050	3600	95	3.500	39,4	0,172	190,5	88,9	178	406	122,2	1,8	177,8	49,8	2,8	5	12-GR 5	.500
1090T	3730	3600	110	4.000	60,3	0,254	211,1	101,6	180	406	142,9	1,8	209,6	56,9	2,8	5	12-GR 5	.625
1100T	6280	2440	130	4.750	98,9	0,426	251,0	90,4	203	406	171,4	1,6	250,8	…	3,2	6	12-GR 5	.750
1110T	9320	2250	150	5.500	137	0,508	269,7	104,1	210	406	196,8	1,6	276,2	…	3,2	6	12-GR 5	.750
1120T	13700	2025	170	6.250	196	0,735	307,8	119,4	246	406	225,4	1,6	319,1	…	4,0	10	12-GR 5	.875
1130T	19900	1800	190	7.000	259	0,907	345,9	134,6	257	406	238,1	1,6	346,1	…	4,0	10	12-GR 5	1.000
1140T	28600	1650	210	8.000	340	1,13	384,0	152,4	267	406	266,7	1,6	385,8	…	4,0	10	12-GR 5	1.125

* Refer to Page 4 for General Information and Reference Notes.

Table 15 - Type T31 Standard Stock Spacer Lengths
BE = Distance Between Shaft Ends)

BE (mm)	BE (inch)	Pump Std	Coupling Size 1020T	1030T	1040T	1050T	1060T	1070T	1080T	1090T	1100T	1110T
89	3.5	ANSI	•	•	•							
100	3.94	ISO	•	•	•							
108	4.25	MISC	•	•	•							
111	4.38	ANSI	•	•	•	•						
119	4.69	MISC	•	•	•	•						
127	5.00	ANSI	•	•	•	•	•	•				
133	5.22	MISC			•							
137	5.38	MISC		•	•							
140	5.51	ISO	•	•	•	•	•	•				
144	5.66	MISC		•	•							
148	5.81	MISC		•	•	•						
152	5.97	MISC			•	•						
155	6.12	MISC		•	•	•	•	•				
176	6.94	MISC	•	•	•	•	•					
180	7.09	ISO			•	•		•	•	•		
184	7.25	ANSI		•	•	•	•	•	•	•		
203	8.00	MISC									•	
218	8.59	MISC							•			
219	8.62	MISC					•	•				
226	8.88	MISC									•	
248	9.75	ANSI					•	•	•	•	•	•
250	9.84	ISO									•	•
252	9.94	MISC							•			
282	11.09	MISC							•			
311	12.25	ANSI					•	•	•	•		

Type T35
Half Spacer / Dimensions - Millimeters

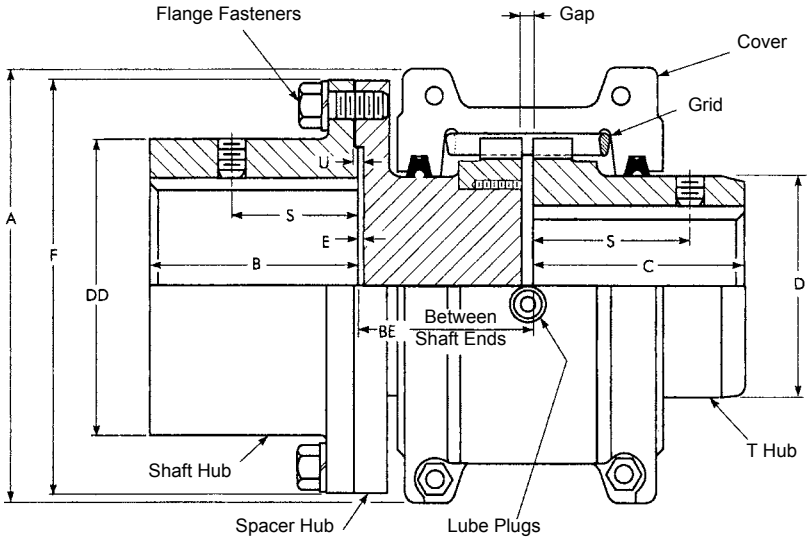

Size *	Torque Rating (Nm) †	Allow Speed (rpm)‡	Hub Bore Max Bore (mm) • Shaft Hub	Hub Bore Max Bore (mm) • T Hub	Hub Bore Max Bore (Inch) • Shaft Hub	Hub Bore Max Bore (Inch) • T Hub	Cpig Wt With No Bore (kg)	Lube Wt (kg)	DIMENSIONS - Millimeters A	B	BE Min Min	BE Min Max	C	D	DD	E	F	S Shaft Hub	S T Hub	U	Gap	Flange Fasteners No per Flange & SAE grade	Dia Inches
1020T	52	3600	35	28	1.375	1.125	2,90	0,0272	97,0	34,9	45	102	47,6	39,7	52,4	0,8	85,7	27,4	39,1	1,8	3	4-Gr 8	.250
1030T	149	3600	43	35	1.625	1.375	3,90	0,0408	105,7	41,3	45	109	47,6	49,2	59,5	0,8	93,7	31,5	39,1	1,8	3	8-Gr 8	.250
1040T	249	3600	56	43	2.125	1.625	5,90	0,0544	114,3	54,0	45	109	50,8	57,2	78,6	0,8	112,7	27,4	40,1	1,8	3	8-Gr 8	.250
1050T	435	3600	67	50	2.375	1.875	8.98	0,0680	135,1	60,3	56	109	60,3	66,7	87,3	0,8	125,4	40,6	44,7	1,8	3	8-Gr 8	.312
1060T	684	3600	80	56	2.875	2.125	13,5	0,0862	147,8	73,0	64	166	63,5	76,2	103,2	1,8	144,5	43,2	52,3	2,8	3	8-Gr 8	.375
1070T	994	3600	85	67	3.125	2.500	17,5	0,113	158,8	79,4	64	166	76,2	87,3	109,5	1,8	152,4	46,7	53,8	2,8	3	12-Gr 8	.375
1080T	2050	3600	95	80	3.500	3.000	28,6	0,172	190,5	88,9	78	204	88,9	104,8	122,2	1,8	177,8	49,8	64,5	2,8	3	12-Gr 5	.500
1090T	3730	3600	110	95	4.000	3.500	42,9	0,254	211,1	101,6	83	204	98,4	123,8	142,9	1,8	209,6	56,9	71,6	2,8	3	12-Gr 5	.625
1100T	6280	2440	130	110	4.750	4.000	70,8	0,426	251,0	90,4	103	205	120,6	142,1	171,4	1,6	250,8	….	….	3,0	5	12-Gr 5	.750
1110T	9320	2250	150	120	5.500	4.500	95,7	0,508	269,7	104,1	106	205	127,0	160,3	196,8	1,6	276,2	….	….	3,0	5	12-Gr 5	.750
1120T	13700	2025	170	140	6.250	5.000	139	0,735	307,8	119,4	125	205	149,2	179,4	225,4	1,6	319,1	….	….	4,0	6	12-Gr 5	.875
1130T	19900	1800	190	170	7.000	6.000	190	0,907	345,9	134,6	130	205	161,9	217,5	238,1	1,6	346,1	….	….	4,0	6	12-Gr 5	1.000
1140T	28600	1650	210	200	8.000	7.250	259	1,130	384,0	152,4	135	205	184,2	254,0	266,7	1,6	358,8	….	….	4,0	6	12-Gr 5	1.125

* Refer to Page 4 for General Information and Reference Notes.

Table 16 - Type T31 Standard Stock Spacer Lengths
BE = Distance Between Shaft Ends)

BE (mm)	BE (inch)	Pump Std	Coupling Size 1020T	1030T	1040T	1050T	1060T	1070T	1080T	1090T	1100T	1110T
45	1.78	MISC	•	•	•							
56	2.22	MISC	•	•	•	•						
64	2.53	MISC	•	•	•	•	•	•				
74	2.91	MISC	•	•	•	•						
75	2.95	MISC					•	•				
89	3.5	ANSI	•	•	•	•	•					
90	3.53	MISC						•	•			
93	3.66	MISC		•	•	•	•	•	•	•		
95	3.73	MISC						•	•	•		
103	4.06	MISC									•	
125	4.94	MISC									•	•
127	5.00	ANSI							•			
131	5.17	MISC									•	•
140	5.51	ISO							•	•	•	
156	6.16	MISC					•	•	•	•		
157	6.19	MISC									•	
180	7.09	ISO								•		•

** CAUTION: To permit removal of T35 shaft hub without moving connected equipment, select a half spacer with dimension BE (in Table 16) greater than dimension B (in uppermost table) or overhang the shaft hub. Refer to our Application Engineers for maximum overhang allowed.

Type T35
Floating Shaft / Dimensions - Millimeters

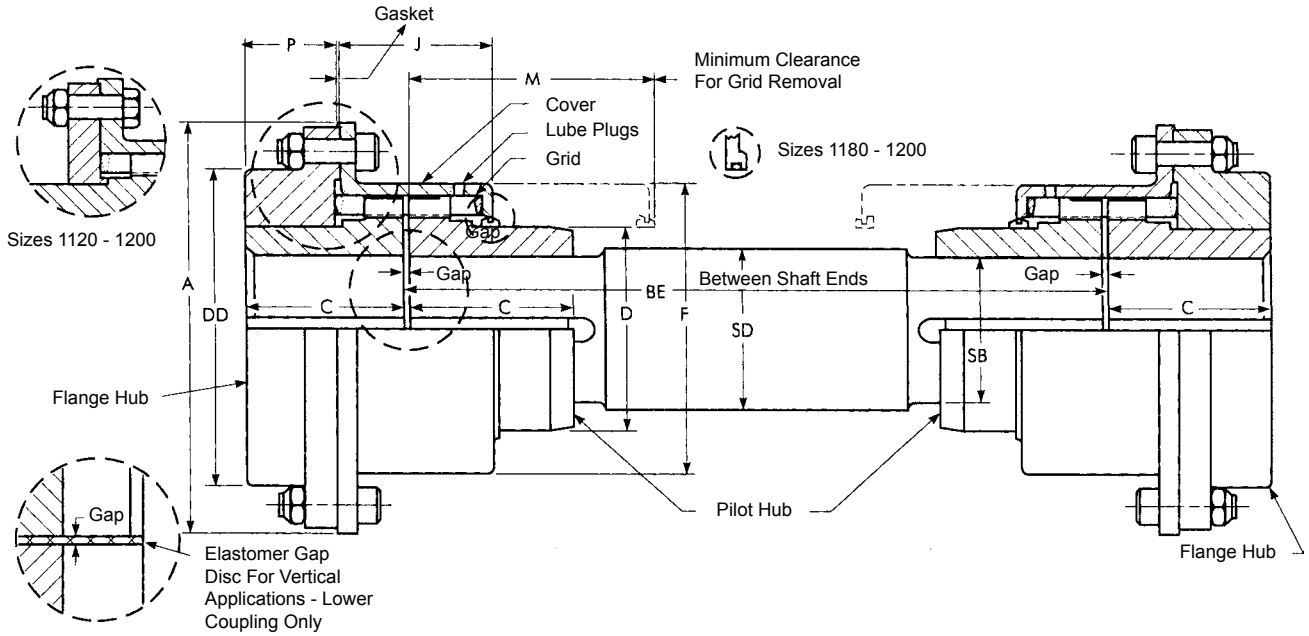

Size *	Torque Rating (Nm) †	Flanged Hub Max Bore		Wt per Cpig With No Bore (kg)	Lube Wt Per Cpig (kg)	DIMENSIONS - Millimeters											
		(mm)•	(Inch)•			A	BE Min	C	D	DD	F	J	M	P	SB	SD	Gap
1030T	149	35	1.375	3,90	0,0408	115,9	162	47,6	49,2	83,7	80,8	50,3	77,7	26,8	27,0	28,6	3
1050T	435	50	1.875	8,85	0,0680	157,5	195	60,3	66,7	105,2	104,8	59,2	94,0	36,2	36,5	38,1	3
1070T	994	67	2.5	15,6	0,113	182,9	213	76,2	87,3	126,5	129,0	65,9	103,1	49,8	49,2	50,8	3
1080T	2050	80	3	26,4	0,172	218,4	275	88,9	104,8	154,9	156,2	85,9	134,1	52,1	61,9	63,5	3
1090T	3730	95	3.5	37,2	0,254	244,9	294	98,4	123,8	180,3	175,8	92,2	143,8	58,5	74,6	76,2	3
1100T	6280	110	4	63,0	0,426	286,0	372	120,6	142,1	211,3	208,3	117,3	181,4	69,3	92,1	95,2	5
1110T	9320	120	4.5	83,5	0,508	324,1	391	127,0	160,3	245,4	228,6	122,2	190,5	73,9	101,6	104,8	5
1120T	13700	140	5	98,0	0,735	327,2	453	149,2	179,4	179,3	257,0	146,3	220,0	83,6	117,5	120,6	6
1130T	19900	170	6	140,2	0,907	365,3	463	161,9	217,5	217,4	295,1	149,5	225,0	94,8	133,4	136,5	6
1140T	28600	200	7.25	209,6	1,13	419,1	482	184,2	254,0	254,0	335,8	155,8	234,7	113,8	142,9	146,0	6
1150T	39800	215	8	276,7	1,95	477,5	549	182,9	271,4	269,2	391,2	177,4	268,2	101,7	161,9	165,1	6
1160T	55900	240	9	381,0	2,81	548,6	587	198,1	304,8	304,8	442,0	189,4	287,0	111,9	200,0	203,2	6
1170T	74600	280	10	519	3,49	604,5	622	215,9	355,6	355,6	494,3	201,0	304,8	124,6	200,0	203,2	6
1180T	103000	300	11	718	3,76	665,5	673	238,8	393,7	393,7	556,3	226,9	330,2	141,4	225,4	228,6	6
1190T	137000	335	12	898	4,40	708,7	711	259,1	436,9	436,9	599,4	241,7	349,5	157,6	250,8	254,0	6
1200T	186000	360	13	1205	5,62	782,3	744	279,4	497,8	497,8	622,9	251,8	365,8	172,8	267,2	279,4	6

* Refer to Page 4 for General Information and Reference Notes.

Type T50
Floating Shaft/Selection

Introduction - Floating shaft diameters have been pre-selected to transmit the coupling torque and need only to be checked for allowable speed.

Construction - Standard shafts are solid, AISI 1018 or 1020 cold rolled steel. Also available is an optional solid, AISI 1018, fully turned, hot rolled steel shaft.

Determine the Allowable Shaft Length

A. Select the coupling size per Pages 5 and 39.
B. From Page 39, determine shaft diameter (Dimension SD) for the coupling selected.
C. From table below locate the floating shaft diameter (Dimension SD) determined in Step B.
D. Determine the allowable shaft length for the required operating speed.

For Speeds under 540 rpm - Read the maximum allowable shaft length to the left of the required shaft diameter.

For Speeds over 540 rpm - Trace right from the shaft diameter determined along the diagonal line to the point of intersection with the required vertical operating speed line. Trace right along the horizontal line to the right and read the maximum allowable shaft length.

E. Determine if shaft requires balancing. Locate point where operating speed and floating shaft length cross. Balance is required when point is located to the right of bold line.
F. If a longer shaft is required, reduce the operating speed if practical, or select the next larger size coupling.
NOTE: For such conditions, the use of a tubular shaft design should be considered, refer to our Application Engineers

Table 17 - Floating Shaft Selections

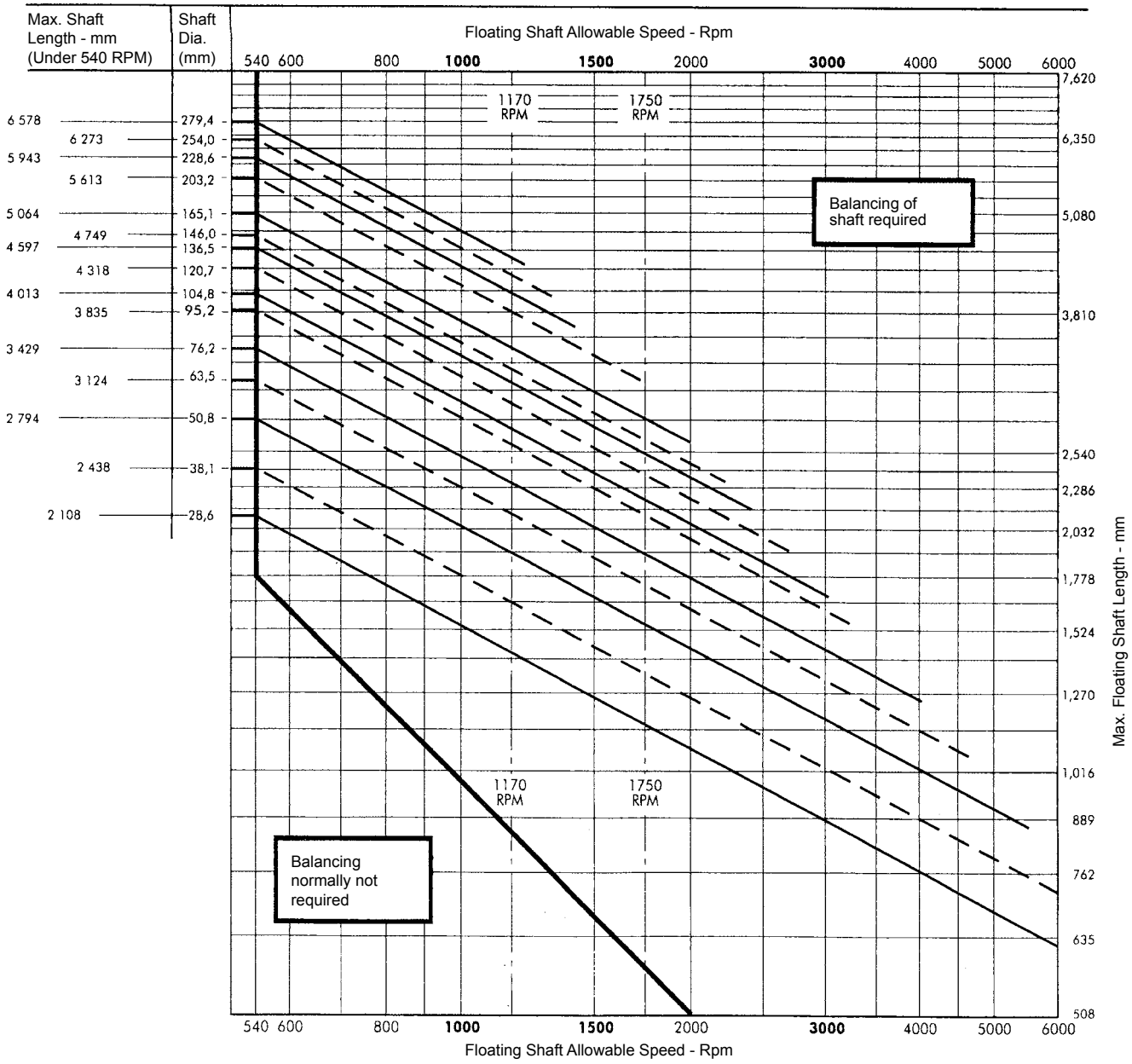

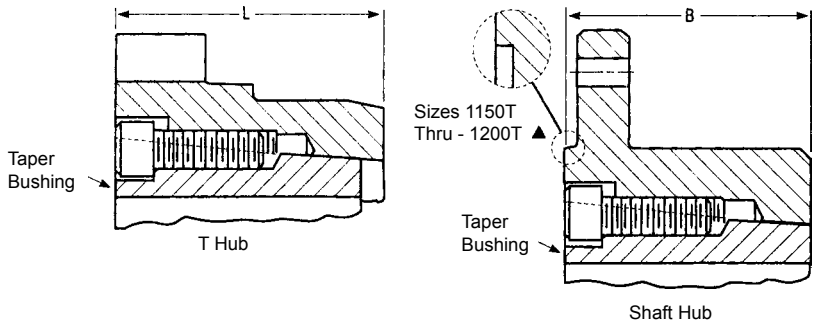

Table 18 - Taper Lock Bushings for Type T Hubs and Shaft Hubs *

Coupling Size	T Hub					Shaft Hub					
	Taper Lock Bushing				L (mm)	Taper Lock Bushing				LB (mm)	Gear Cpig Rigid Hub Size
	Bushing Number	Bore Range ** (mm)	Torque (Nm)	kW per 100 rpm		Bushing Number	Bore Range ** (mm)	Torque (Nm)	kW per 100 rpm		
1020T	…	…	…	…	…	1108	13 to 26	52	0,0054	35,1	…
1030T	1108	13 to 26	147	0,0154	41,1	1108	13 to 26	147	0,0154	41,1	…
1040T	1108	13 to 26	147	0,0154	41,1	1310	13 to 35	249	0,0261	53,8	…
1050T	1215	13 to 32	401	0,0420	47,8	1615	13 to 40	435	0,0456	60,5	…
1060T	1615	13 to 40	486	0,0509	53,8	2012	13 to 48	684	0,0716	73,2	…
1070T	2012	13 to 48	808	0,0846	53,8	2525	20 to 63	994	0,1041	79,2	…
1080T	2525	20 to 63	1280	0,1340	66,5	2525	20 to 63	1280	0,1340	88,9	…
1090T	3030	24 to 75	2710	0,2838	79,2	3030	24 to 75	2710	0,2838	102	…
1100T	3030	24 to 75	2710	0,2838	88,9	3535	31 to 97	5510	0,5770	90,4	…
1110T	3535	31 to 97	5060	0,5299	91,9	4040	37 to 109	8730	0,9142	104	…
1120T	4040	37 to 109	8730	0,9142	111	4545	62 to 121	12400	1,2986	119	…
1130T	4545	62 to 121	12400	1,2986	117	5050	75 to 127	14200	1,4871	135	…
1140T	5050	75 to 127	14200	1,4871	130	5050	75 to 127	14200	1,4871	152	…
1150T	5050	75 to 127	14200	1,4871	183	6050	88 to 152	31900	3,3407	173***	1055
1160T	5050	75 to 127	14200	1,4871	198	7060	100 to 177	47000	4,9220	186***	1060
1170T	7060	100 to 177	47000	4,9220	216	8065	113 to 203	51500	5,3932	220***	1070
1180T	8065	113 to 203	51500	5,3932	239	8065	113 to 203	51500	5,3932	249***	1080
1190T	8065	113 to 203	51500	5,3932	259	10085	178 to 253	98200	10,2838	276***	1090
1200T	10085	178 to 253	98200	10,2838	279	10085	178 to 253	98200	10,2838	305***	1100

* Use straight bored hubs for shock load or reversing load applications or applications that require 1.75 or higher coupling service factors or refer to our Application Engineers for selection, price and delivery of special bushings. Refer to our Application Engineers for selection of taper-lock bushings for Type T50 and T70 couplings.
** Bushings require shaft keyways as calculated in Table 19, Page 42.
*** For Size 1150T thru 1200T, dimension “B” is to the hub counterbore.

Table 19 - Recommended Commercial Keys for Bores with One Key Millimeters & Inches

MILLIMETERS (Bores per ISO 286 - 2 - 1988 (E), Keyway to BS 4235 pt 1 : 1972 and DIN 6885)

Shaft Diameter		Key	Shaft Diameter		Key	Shaft Diameter		Key	Shaft Diameter		Key
Over	Through		Over	Through		Over	Through		Over	Through	
6	8	2 x 2	38	44	12 x 8	95	110	28 x 16	260	290	63 x 32
8	10	3 x 3	44	50	14 x 9	110	130	32 x 18	290	330	70 x 36
10	12	4 x 4	50	58	16 x 10	130	150	36 x 20	330	380	80 x 40
12	17	5 x 5	58	65	18 x 11	150	170	40 x 22	380	440	90 x 45
17	22	6 x 6	65	75	20 x 12	170	200	45 x 25	440	500	100 x 50
22	30	8 x 7	75	85	22 x 14	200	230	50 x 28	…	…	…
30	38	10 x 8	85	95	25 x 14	230	260	56 x 32	…	…	…

INCHES (Bores per ANSI B17.1 Standard)

Shaft Diameter		Key	Shaft Diameter		Key	Shaft Diameter		Key	Shaft Diameter		Key
Over	Through		Over	Through		Over	Through		Over	Through	
.438	.562	.125 x .125	1.750	2.250	.500 x .500	4.500	5.500	1.250 x 1.250	11.000	13.000	3.000 x 2.000
.562	.875	.188 x .188	2.250	2.750	.625 x .625	5.500	6.500	1.500 x 1.500	13.000	15.000	3.500 x 2.500
.875	1.250	.250 x .250	2.750	3.250	.750 x .750	6.500	7.500	1.750 x 1.500	15.000	18.000	4.000 x 3.000
1.250	1.375	.312 x .312	3.250	3.750	.875 x .875	7.500	9.000	2.000 x 1.500	18.000	22.000	5.000 x 3.500
1.375	1.750	.375 x .375	3.750	4.500	1.000 x 1.000	9.000	11.000	2.500 x 1.750	…	…	…

Table 20 - Recommended Bores Tolerances Coupling Hubs - Millimeters & Inches

Nominal	Bore Diameter Tolerance
Up to 50	M7
Over 50 to 80	K7
Over 80 to 100	K7
Over 100 to 200	K7
Over 200 to 355	K7
Over 355 to 500	K7

Coupling Misalignment

Maximum life and minimum maintenance for the coupling and connected machinery will result if couplings are accurately aligned. Coupling life expectancy between initial alignment and maximum operating limits is a function of load, speed and lubrication. For applications requiring greater misalignment, refer application details to our Application Engineers.

Table 21 - Type T Grid Coupling Misalignment Capacity *

Size	Recommended Installation Maximum			Maximum Operational	
	Parallel Offset - P mm		Angular (0,062) X minus Y mm	Parallel Offset - P mm	Angular (0,062) X minus Y mm
	Types T10 T20 T31 T35	Type 50		Types T10 T20 T31 T35	
1020T	0,152		0,0762	0,305	0,254
1030T	0,152	0,0508	0,0762	0,305	0,305
1040T	0,152		0,0762	0,305	0,330
1050T	0,203	0,0508	0,102	0,406	0,406
1060T	0,203		0,127	0,406	0,457
1070T	0,203	0,0508	0,127	0,406	0,508
1080T	0,203	0,0508	0,152	0,406	0,610
1090T	0,203	0,0762	0,178	0,406	0,711
1100T	0,254	0,0762	0,203	0,508	0,838
1110T	0,254	0,0762	0,229	0,508	0,914
1120T	0,279	0,0762	0,254	0,559	1,016
1130T	0,279	0,102	0,305	0,559	1,194
1140T	0,279	0,102	0,330	0,559	1,346
1150T	0,305	0,102	0,406	0,610	1,575
1160T	0,305	0,127	0,457	0,610	1,778
1170T	0,305	0,127	0,508	0,610	2,007
1180T	0,381	0,127	0,559	0,762	2,261
1190T	0,381	0,152	0,610	0,762	2,464
1200T	0,381	0,152	0,686	0,762	2,718
1210T	0,457		0,737	0,914	2,997
1220T	0,457		0,813	0,914	3,277
1230T	0,483		0,889	0,965	3,607
1240T	0,483		0,965	0,965	3,912
1250T	0,508		1,067	1,016	4,293
1260T	0,508		1,168	1,016	4,648

* Values may be combined for an installation or an operating condition

ANGULAR MISALIGNMENT

Angular misalignment is expressed in degrees and as the difference between the value of X minus Y, as illustrated.

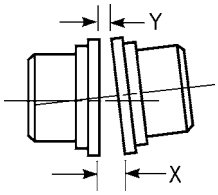

PARALLEL OFFSET MISALIGNMENT

Parallel misalignment is the distance P between shaft centerlines as shown.

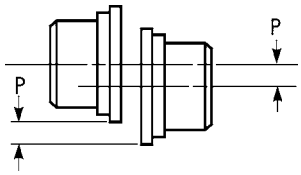

Table 22 - Floating Shaft (Solid) Balancing

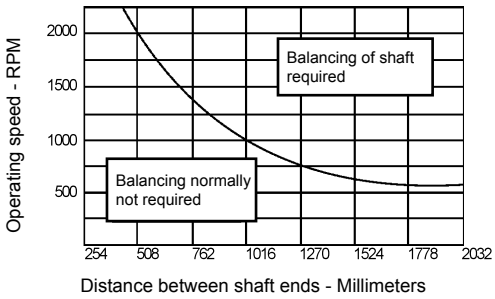

NOTES

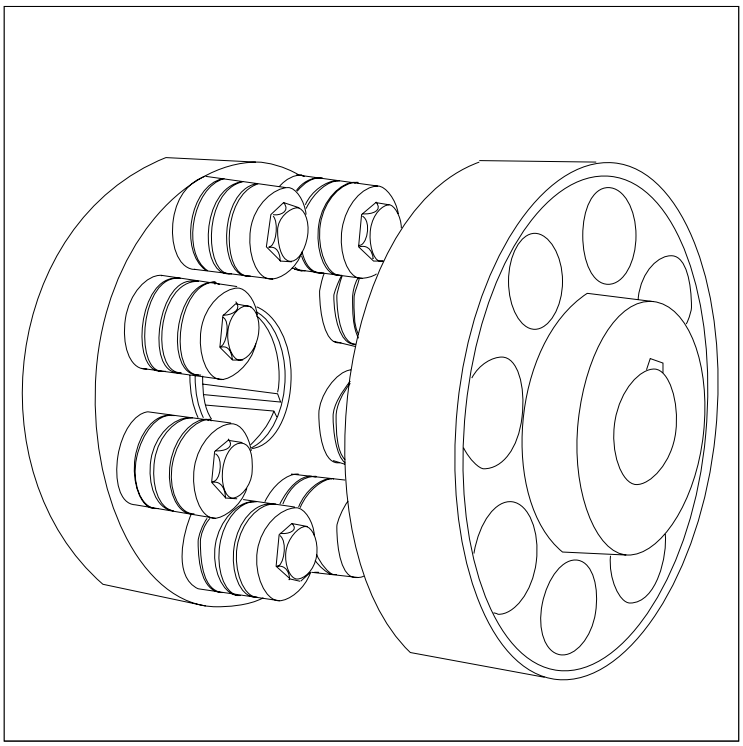

CONE RING

Pin and bush elastomer couplings

SERIES X

GENERAL DESCRIPTION

Cone Ring Couplings

Pin and bush elastomer Couplings

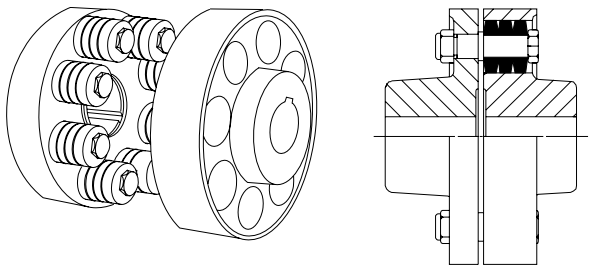

611 Heavy Duty Straight Bored

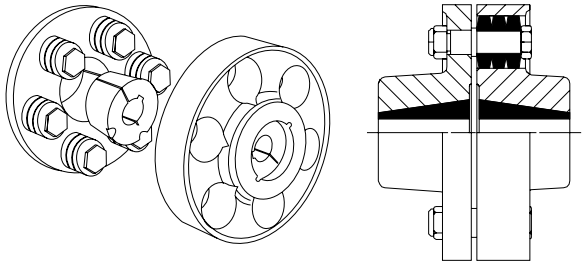

613 Heavy Duty Taper Bushed

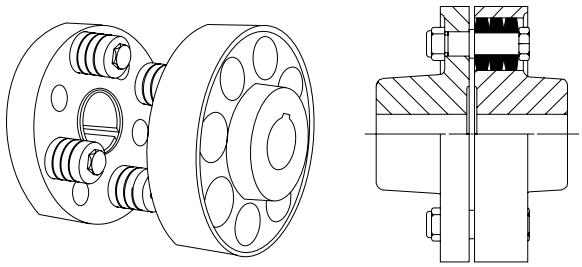

612 Medium Duty Straight Bored

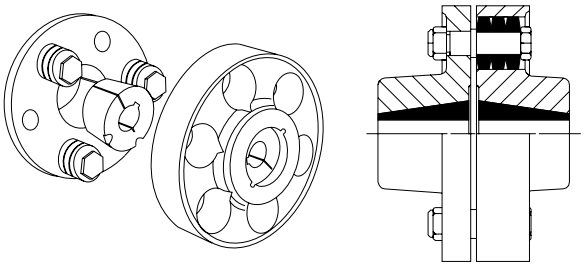

614 Medium Duty Taper Bushed

General Description

Flexible Cone Ring couplings, types 61,612,613, 614 are available with bore sizes up to 355 mm diameter and a basic rated torque up to 188700 Nm.

Operational Details

They accommodate all types of shaft misalignment met in normal operation, being a development of the old pin and bush design which it resembles in simplicity and ease of assembly and dismantling. It differs fundamentally in the way in which the resilient material behaves by substituting the parallel bush with a series of rubber rings of conical section. This provides greatly improved torsional flexibility together with a limited freedom of axial movement of one connected shaft relative to the other.

Types Available

Two options are available, MEDIUM DUTY and HEAVY DUTY.

Medium duty couplings (types 612 and 614) are identical to heavy duty couplings (types 611 and 613) except that they are supplied with only half the standard number of pin and ring assemblies. This enables a useful cost saving to be made when the size of coupling is determined by the shaft diameter rather than the coupling's torque capacity.

Taper Bushing

Flexible Cone Ring couplings are also available with taper bushes (types 613 and 614) with bore sizes up to 125mm (4.92 inch) diameter, providing ease of assembly and dismantling together with flexibility to change shaft sizes by changing only the taper bushes.

UNIT DESIGNATIONS

						Driving Hub				Driven Hub				
Series	Type of Coupling			Size of Coupling		Driving Hub Bore & Keyway	Driving Hub Bore Diameter			Driven Hub Bore & Keyway	Driven Hub Bore Diameter			Additional Features
1	2	3	4	5	6	7	8	9	10	11	12	13	14	15
* X														
Example X	6	1	2	0	2	M	0	2	5	M	0	2	8	-

1 - Series X

Range X

2, 3, 4 - Type of Coupling

- 6 1 1 - Cone Ring Flexible Coupling StraightBored, Heavy Duty
- 6 1 2 - Cone Ring Flexible Coupling StraightBored, Medium Duty
- 6 1 3 - Cone Ring Flexible Coupling StraightBored, Heavy Duty
- 6 1 4 - Cone Ring Flexible Coupling StraightBored, Medium Duty

5, 6 - Size of Coupling

eg 0 2

7 - Driving Hub Bore and Keyway

- M - Metric Bore Parallel Keyway
- T - Metric Bore Taper Keyway
- I - Inch Bore Parallel Keyway
- B - Inch Bore Taper Keyway
- P - Pilot Bore
- C - Customer Specified Metric
- S - Customer Specified Inch
- A - American Square Key
- H - Half Coupling

8, 9, 10 - Driving Hub Bore Diameter Reference

eg 0 2 5

15 - Additional Requirements

- - - Non Required
- F - Flame Proof
- V - Vertical Mounting

12, 13, 14 - Driven Hub Bore Diameter Reference

eg 0 2 8

11 - Driven Hub Bore and Keyway

- M - Metric Bore Parallel Keyway
- T - Metric Bore Taper Keyway
- I - Inch Bore Parallel Keyway
- B - Inch Bore Taper Keyway
- P - Pilot Bore
- C - Customer Specified Metric
- S - Customer Specified Inch
- A - American Square Key
- H - Half Coupling

* This Page May Be Photocopied Allowing The Customer To Enter Their Order

COUPLING DIMENSIONS & PIN AND CONE RING DIMENSIONS

Type 611
Cone Ring Heavy Duty Straight Bored

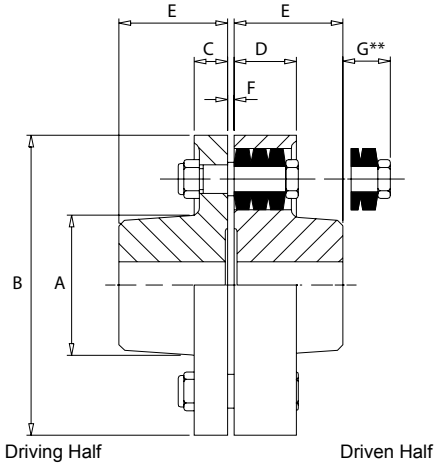

Coupling Size	Torque Rating (Nm)	Allow Speed (rpm)‡	Coupling Weight With No Bore (kg)	Max. Bore	Min. Bore *		Hub length E	G **	A	B	C	D	F	No of pins
					Driving Half	Driven Half								
01	181	4,780	4.9	38	*	19	48	20	64	134	12	26	3	6
02	279	4,355	6.3	42	*	22	56	12	70	147	12	26	3	8
03	465	3,745	10.4	48	*	25	61	26	83	171	19	35	3	6
04	717	3,320	14.2	60	*	28	68	19	97	193	19	35	3	8
05	1018	3,000	19.8	70	*	32	76	11	117	215	19	35	3	10
06	2438	2,520	36.9	80	28	42	88	46	127	254	31	56	3	8
07	3362	2,295	48.5	90	35	55	100	34	147	279	31	56	3	10
08	5047	1,940	76.4	100	40	60	122	22	180	330	30	61	3	12
09	8433	1,725	121	120	50	65	137	45	206	371	46	81	6	10
10	11530	1,530	163	140	80	80	152	30	230	419	46	81	6	12
11	15060	1,400	209	150	90	90	170	12	256	457	46	81	6	14
12	23500	1,200	305	170	100	100	193	0	296	533	46	81	6	18

Larger sizes available upon request.
* Up to size 05 the driving half hubs are solid.
** The coupling pin withdrawal distance.
Refer to Page 4 for General Information and Reference Notes.

Pin and Cone Ring Dimensions - Millimeters)

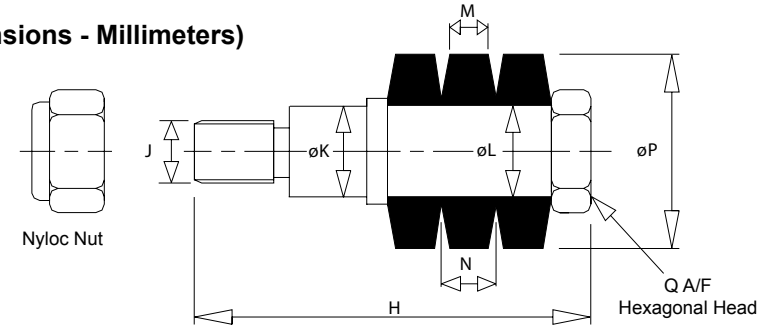

Coupling size	Pin Assembly Number	Cone Ring Number	H	J	K	L	M	N	P	Q	Max Bolt Tightening Torque (Nm)	No of Rubber Rings Per Pin
01 - 02	41111-2-024	32213-9-102	58	M10	12.7	12.7	5.1	7.6	28.2	17	15	3
03 - 05	41111-2-025	32213-9-103	75	M12	15.9	17.8	6.4	10.2	38.1	24	25	3
06 - 08	41111-2-026	32213-9-104	118	M20	25.4	25.4	8.9	12.7	50.8	36	115	4
09 - 12	41111-2-027	32213-9-105	161	M24	28.6	30.5	12.7	17.8	63.5	36	200	4
13 - 14	41111-2-028	32213-9-106	208	M36	41.3	43.2	15.2	22.9	85.3	51	710	4
15 - 20	41111-2-029	32213-9-107	259	M48	57.2	58.4	20.3	30.5	113.7	70	1725	4

COUPLING DIMENSIONS & PIN AND CONE RING DIMENSIONS

Type 613
Cone Ring Heavy Duty Taper Bushed

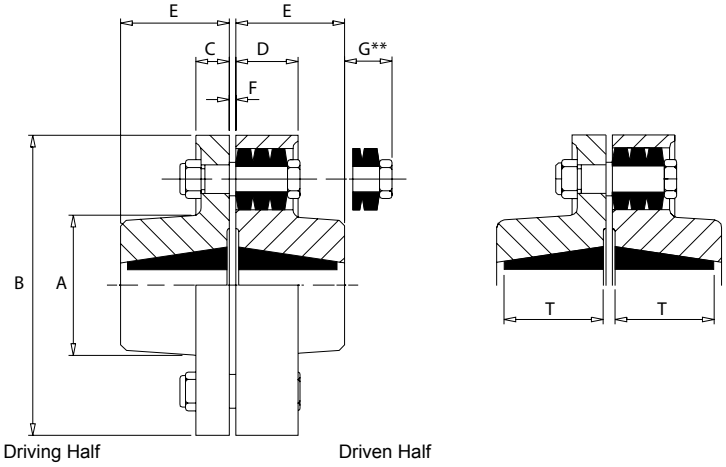

Coupling Size	Torque Rating (Nm)	Allow Speed (rpm)‡	Coupling Weight With No Bore (kg)	Max. Bore	Min. Bore *	Hub length E	Hub length T	G **	A	B	C	D	F	No of pins
1	181	4,780	4.9	25	9	40	22.3	28	64	134	12	26	3	6
2	279	4,355	6.3	32	11	45	38.1	23	70	147	12	26	3	8
3	465	3,745	10.4	40	14	50	38.1	37	83	171	19	35	3	6
4	717	3,320	14.2	48	18	50	44.5	37	97	193	19	35	3	8
5	1018	3,000	19.8	60	16	50	44.5	37	117	215	19	35	3	10
6	2438	2,520	36.9	60	19	75	63.5	59	127	254	31	56	3	8
7	3362	2,295	48.5	75	35	82	76.2	52	147	279	31	56	3	10
8	5047	1,940	76.4	90	35	98	88.9	41	180	330	30	61	3	12
9	8433	1,725	121	110	55	124	114.3	53	206	371	46	81	6	10
10	11530	1,530	163	125	70	136	127	41	230	419	46	81	6	12
11	Not available as taper bushed													
12														

** The coupling pin withdrawal distance.
Refer to Page 4 for General Information and Reference Notes.

Pin and Cone Ring Dimensions - Millimeters)

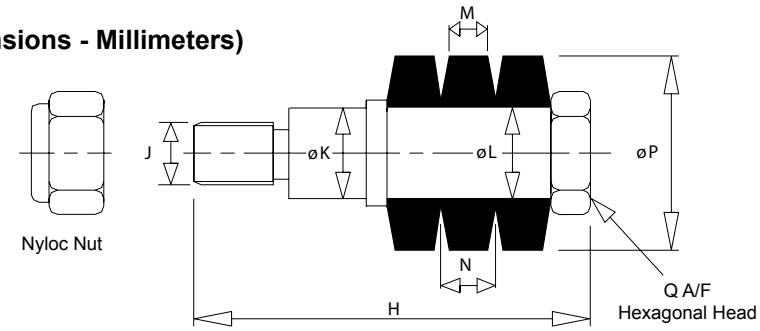

Coupling size	Pin Assembly Number	Cone Ring Number	H	J	K	L	M	N	P	Q	Max Bolt Tightening Torque (Nm)	No of Rubber Rings Per Pin
01 - 02	41111-2-024	32213-9-102	58	M10	12.7	12.7	5.1	7.6	28.2	17	15	3
03 - 05	41111-2-025	32213-9-103	75	M12	15.9	17.8	6.4	10.2	38.1	24	25	3
06 - 08	41111-2-026	32213-9-104	118	M20	25.4	25.4	8.9	12.7	50.8	36	115	4
09 - 12	41111-2-027	32213-9-105	161	M24	28.6	30.5	12.7	17.8	63.5	36	200	4
13 - 14	41111-2-028	32213-9-106	208	M36	41.3	43.2	15.2	22.9	85.3	51	710	4
15 - 20	41111-2-029	32213-9-107	259	M48	57.2	58.4	20.3	30.5	113.7	70	1725	4

Table 19 - Recommended Commercial Keys for Bores with One Key Millimeters & Inches

MILLIMETERS (Bores per ISO 286 - 2 - 1988 (E), Keyway to BS 4235 pt 1 : 1972 and DIN 6885)

Shaft Diameter		Key	Shaft Diameter		Key	Shaft Diameter		Key	Shaft Diameter		Key
Over	Through		Over	Through		Over	Through		Over	Through	
6	8	2 x 2	38	44	12 x 8	95	110	28 x 16	260	290	63 x 32
8	10	3 x 3	44	50	14 x 9	110	130	32 x 18	290	330	70 x 36
10	12	4 x 4	50	58	16 x 10	130	150	36 x 20	330	380	80 x 40
12	17	5 x 5	58	65	18 x 11	150	170	40 x 22	380	440	90 x 45
17	22	6 x 6	65	75	20 x 12	170	200	45 x 25	440	500	100 x 50
22	30	8 x 7	75	85	22 x 14	200	230	50 x 28	…	…	…
30	38	10 x 8	85	95	25 x 14	230	260	56 x 32	…	…	…

INCHES (Bores per ANSI B17.1 Standard)

Shaft Diameter		Key	Shaft Diameter		Key	Shaft Diameter		Key	Shaft Diameter		Key
Over	Through		Over	Through		Over	Through		Over	Through	
.438	.562	.125 x .125	1.750	2.250	.500 x .500	4.500	5.500	1.250 x 1.250	11.000	13.000	3.000 x 2.000
.562	.875	.188 x .188	2.250	2.750	.625 x .625	5.500	6.500	1.500 x 1.500	13.000	15.000	3.500 x 2.500
.875	1.250	.250 x .250	2.750	3.250	.750 x .750	6.500	7.500	1.750 x 1.500	15.000	18.000	4.000 x 3.000
1.250	1.375	.312 x .312	3.250	3.750	.875 x .875	7.500	9.000	2.000 x 1.500	18.000	22.000	5.000 x 3.500
1.375	1.750	.375 x .375	3.750	4.500	1.000 x 1.000	9.000	11.000	2.500 x 1.750	…	…	…

Table 20 - Recommended Bores Tolerances Coupling Hubs - Millimeters & Inches

Nominal	Bore Diameter Tolerance
Up to 50	M7
Over 50 to 80	K7
Over 80 to 100	K7
Over 100 to 200	K7
Over 200 to 355	K7
Over 355 to 500	K7

Coupling Misalignment

Maximum life and minimum maintenance for the coupling and connected machinery will result if couplings are accurately aligned. Coupling life expectancy between initial alignment and maximum operating limits is a function of load, speed and lubrication. For applications requiring greater misalignment, refer application details to our Application Engineers.

Table 32 - Cone Ring Coupling Misalignment Capacity *

Coupling Size	Angular Misalignment Degrees	Parallel Misalignment mm
	Operational	Operational
01	1	± 0.1
02	1	± 0.1
03	1	± 0.15
04	1	± 0.15
05	1	± 0.15
06	1	± 0.2
07	1	± 0.2
08	1	± 0.2
09	1	± 0.25
10	1	± 0.25
11	1	± 0.25
12	1	± 0.25

ANGULAR MISALIGNMENT

Angular misalignment is expressed in degrees and as the difference between the value of X minus Y, as illustrated.

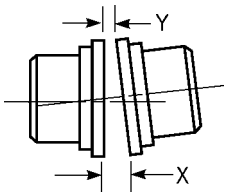

PARALLEL OFFSET MISALIGNMENT

Parallel misalignment is the distance P between shaft centerlines as shown.

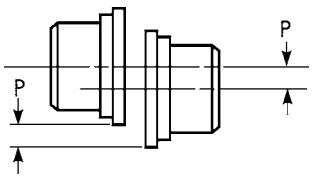

NOTES

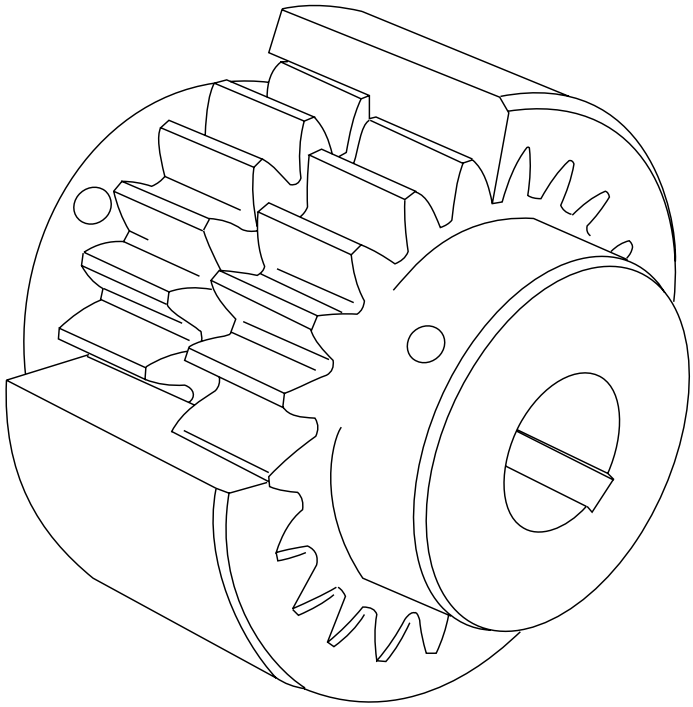

NYLICON

Gear couplings with nylon sleeve

SERIES X

GENERAL DESCRIPTION

Nylicon Couplings

Gear Coupling with nylon sleeve

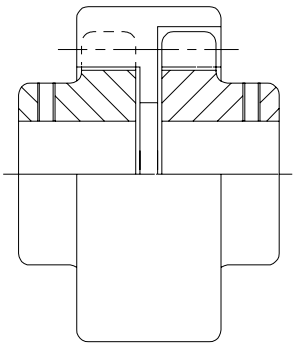

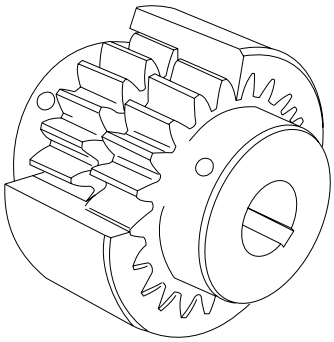

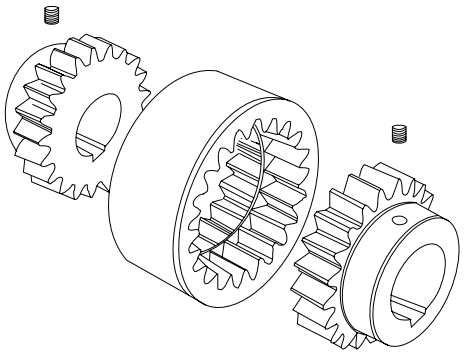

General Description

Nylicon flexible gear couplings, types 600, are available in three sizes and are ideal for small power drives with bore sizes up to 55mm (2.25 inches) diameter and a basic rated torque up to 463 Nm.

Uniform Loading

Thermosetting plastic sleeves provide non conductive assemblies. Staggered internal teeth ensure uniform loading and an internal central buffer ring between the two hubs promote axial location giving protection to the gear teeth.

Low Cost Option

They compensate for all types of shaft misalignment and allow a small amount of end float. Nylicon couplings are easy to assemble and require no maintenance giving low cost reliable service under the most arduous conditions of weather, atmospheric pollution or humidity.

Specification

Nylon couplings are available pilot bored (i.e. without keyways) allowing the customer to finish machine bores and keyways to special requirements, or supplied with standard bores and keyways. Each size of coupling can have any combination of pilot and/or standard bores. Socket set screws and setting gauge are provided with each coupling.

UNIT DESIGNATIONS

						Driving Hub				Driven Hub				
Series	Type of Coupling			Size of Coupling		Driving Hub Bore & Keyway	Driving Hub Bore Diameter			Driven Hub Bore & Keyway	Driven Hub Bore Diameter			Additional Features
1	2	3	4	5	6	7	8	9	10	11	12	13	14	15
* X														
Example X	6	0	0	0	2	M	0	1	0	M	0	1	1	-

1 - Series X

Range X

2, 3, 4 - Type of Coupling

6 0 0 - Nylicon Coupling

5, 6 - Size of Coupling

eg 0 1 0 2 or 0 3

See Page 68

7 - Driving Hub Bore and Keyway

- M - Metric Bore Parallel Keyway
- T - Metric Bore Taper Keyway
- I - Inch Bore Parallel Keyway
- B - Inch Bore Taper Keyway
- P - Pilot Bore
- C - Customer Specified Metric
- S - Customer Specified Inch
- A - American Square Key
- H - Half Coupling

8, 9, 10 - Driven Hub Bore Diameter Reference

eg - - -
0 1 0

15 - Additional Requirements

- \- Non Available

12, 13, 14 - Driven Hub Bore Diameter Reference

eg - - -
0 2 8

11 - Driven Hub Bore and Keyway

- M - Metric Bore Parallel Keyway
- T - Metric Bore Taper Keyway
- I - Inch Bore Parallel Keyway
- B - Inch Bore Taper Keyway
- P - Pilot Bore
- C - Customer Specified Metric
- S - Customer Specified Inch
- A - American Square Key
- H - Half Coupling

* This Page May Be Photocopied Allowing The Customer To Enter Their Order

Type 600
NyliconCoupling

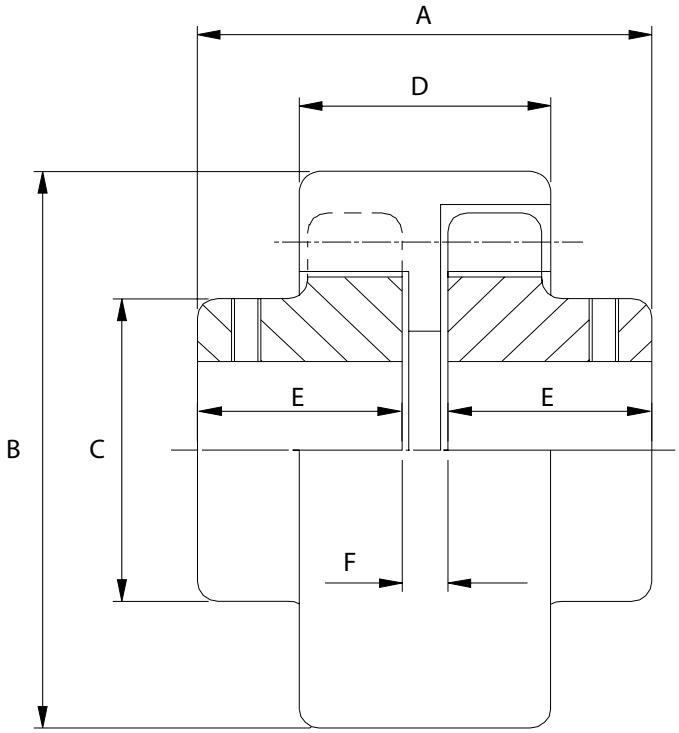

Coupling Size	Torque Rating (Nm)	Max Speed No Misalignment (rpm)‡	Max. Bore *		Weight Solid Hubs (kg^2)	DIMENSIONS - Millimeters						Pilot Bore (mm)
			Driving Half	Driven Half		A	B	C	D	E	Distance Between Hub Faces F (Min)	
01	56.5	8,520	25	1.000	0.50	50	64	39	28	22	6	10
02	220	7,000	38	1.625	1.68	76	89	58	42	35	6	15
03	463	5,000	55	2.250	4.35	104	115	78	56	48	8	28

Refer to Page 4 for General Information and Reference Notes.

Table 33 - Recommended Commercial Keys for Bores with One Key Millimeters & Inches

MILLIMETERS (Bores per ISO 286 - 2 - 1988 (E), Keyway to BS 4235 pt 1 : 1972 and DIN 6885)

Shaft Diameter		Key	Shaft Diameter		Key	Shaft Diameter		Key	Shaft Diameter		Key
Over	Through		Over	Through		Over	Through		Over	Through	
6	8	2 x 2	38	44	12 x 8	95	110	28 x 16	260	290	63 x 32
8	10	3 x 3	44	50	14 x 9	110	130	32 x 16	290	330	70 x 36
10	12	4 x 4	50	58	16 x 10	130	150	36 x 20	330	380	80 x 40
12	17	5 x 5	58	65	18 x 11	150	170	40 x 22	380	440	90 x 45
17	22	6 x 6	65	75	20 x 12	170	200	45 x 25	440	500	100 x 50
22	30	8 x 7	75	85	22 x 14	200	230	50 x 28	…	…	…
30	38	10 x 8	85	95	25 x 14	230	260	56 x 32	…	…	…

INCHES (Bores per ANSI B17.1 Standard)

Shaft Diameter		Key	Shaft Diameter		Key	Shaft Diameter		Key	Shaft Diameter		Key
Over	Through		Over	Through		Over	Through		Over	Through	
.438	.562	.125 x .125	1.750	2.250	.500 x .500	4.500	5.500	1.250 x 1.250	11.000	13.000	3.000 x 2.000
.562	.875	.188 x .188	2.250	2.750	.625 x .625	5.500	6.500	1.500 x 1.500	13.000	15.000	3.500 x 2.500
.875	1.250	.250 x .250	2.750	3.250	.750 x .750	6.500	7.500	1.750 x 1.500	15.000	18.000	4.000 x 3.000
1.250	1.375	.312 x .312	3.250	3.750	.875 x .875	7.500	9.000	2.000 x 1.500	18.000	22.000	5.000 x 3.500
1.375	1.750	.375 x .375	3.750	4.500	1.000 x 1.000	9.000	11.000	2.500 x 1.750	…	…	…

Table 34 - Recommended Bores Tolerances Coupling Hubs - Millimeters

Nominal	Bore Diameter Tolerance
Up to 50	M7
Over 50 to 80	K7
Over 80 to 100	K7
Over 100 to 200	K7
Over 200 to 355	K7
Over 355 to 500	K7

ENGINEERING DATA

Coupling Misalignment

Maximum life and minimum maintenance for the coupling and connected machinery will result if couplings are accurately aligned. Coupling life expectancy between initial alignment and maximum operating limits is a function of load, speed and lubrication. For applications requiring greater misalignment, refer application details to our Application Engineers.

Item		Coupling Size		
		01	02	03
Max Speed (Rev/Min.) With Misalignment (Degrees)	10º (Nmax)	8520	7000	5000
	0.25º Misalignment	7330	6160	4430
	0.5º Misalignment	5900	5200	3780
	0.75º Misalignment	4000	3410	2630
	1º Misalignment	3300	2550	2200
Allowable Misalignment	Angular Per Coupling Mesh	0.75º	0.75º	0.75º
	Parallel Offset (mm)	±0.20	±0.20	±0.35
	Equivalent Angular Misalignment Of The Parallel Offset Per Mesh	0.65º	0.41º	0.63º
Backlash	Angular (Radians)	.0118 To .0274	.0077 To .0183	.0130 To .0200
	Linear (mm at Pitch Line Diameter)	.267 To .617	.254 To .604	.566 To .868

ANGULAR MISALIGNMENT

Angular misalignment is expressed in degrees and as the difference between the value of X minus Y, as illustrated.

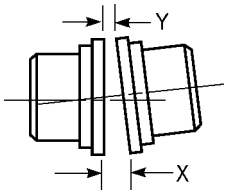

PARALLEL OFFSET MISALIGNMENT

Parallel misalignment is the distance P between shaft centerlines as shown.

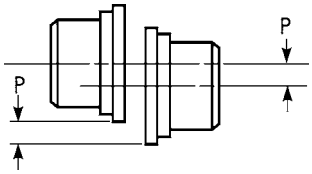

SERIES X

COUPLING APPLICATION DATA SHEET

Company _____ Date _____

Address _____ Phone _____

_____ Fax _____

_____ Response Req'd By _____

_____ Submitted By _____

Coupling Design:

Gear ☐ Grid ☐ Elastomer ☐ Nylicon ☐

Horizontally Mounted ☐ Vertically Mounted ☐

Coupling Type:

Close Coupled ☐ Spacer ☐ Other _____

Section I - Prime Mover:

Type: Electric Motor ☐ Engine ☐ (No. of Cyl.) _____ Turbine ☐

Diesel ☐ Gasoline ☐ Gas ☐ Steam ☐ Air ☐ Gas ☐

Rating (hp, kW) _____ Base Speed (rpm) _____ Maximum Speed (rpm) _____

Section II - Application Data

Description _____

_____

Duty Cycle: Continuous ☐ Intermittent ☐

Load Characteristics

Unidirectional ☐ Revering ☐

Smooth ☐ Light Shock ☐ Heavy Shock ☐

Little Vibration ☐ Med. Vibration ☐ Heavy Vibration ☐

Environmental Concerns (Temperature, Moisture, Dust, Corrosive Materials) _____

Operating Environmental Temperature: _____ Operating Environmental Humidity: _____

Exposure to Chemicals / Fluids - List: _____

Section III - Coupling Selection Data

hp / bhp / kW _____ Torque _____

Coupling Speed _____ rpm

Distance Between Shaft Ends or Shaft Gap _____

Driver Shaft Diameter _____ Key _____

Fit Clearance ☐ Interference ☐ Other _____

Driver Shaft Diameter _____ Key _____

Fit Clearance ☐ Interference ☐ Other _____

Design Requirements: Balance Class: _____

Weight _____ WR^2 _____

Stiffness _____

Misalignment:

Angular _____ Offset _____

Axial _____

Specification Applicable:

API-610 ☐ API-671 ☐ Other _____

Service Factor:

AGMA Recommended ☐ Other _____

Competitive Data:

Make _____

Size & Type _____

Bores _____ & _____

Price _____

Additional Comments: _____

_____

_____

_____

Sketch Area

NOTES

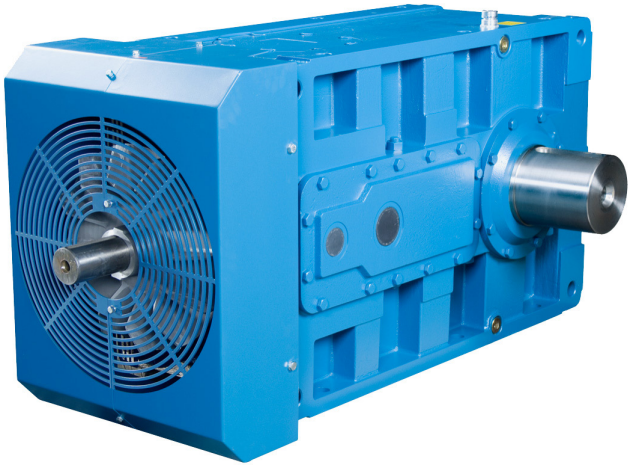

iMAG
INDUSTRIAL MOTORS
AND GEARS LIMITED

Industrial Motors and Gears Limited

Tel. 01642 467999 | Mob. 07815 889460
Fax. 01642 467988
Email. sales@imag-uk.com
Web. www.imag-uk.com

The Quality Choice

Industrial Motors and Gears Limited is a limited company
registered in England and Wales.
Registration Number 4293316.
VAT Registration Number 780154731.